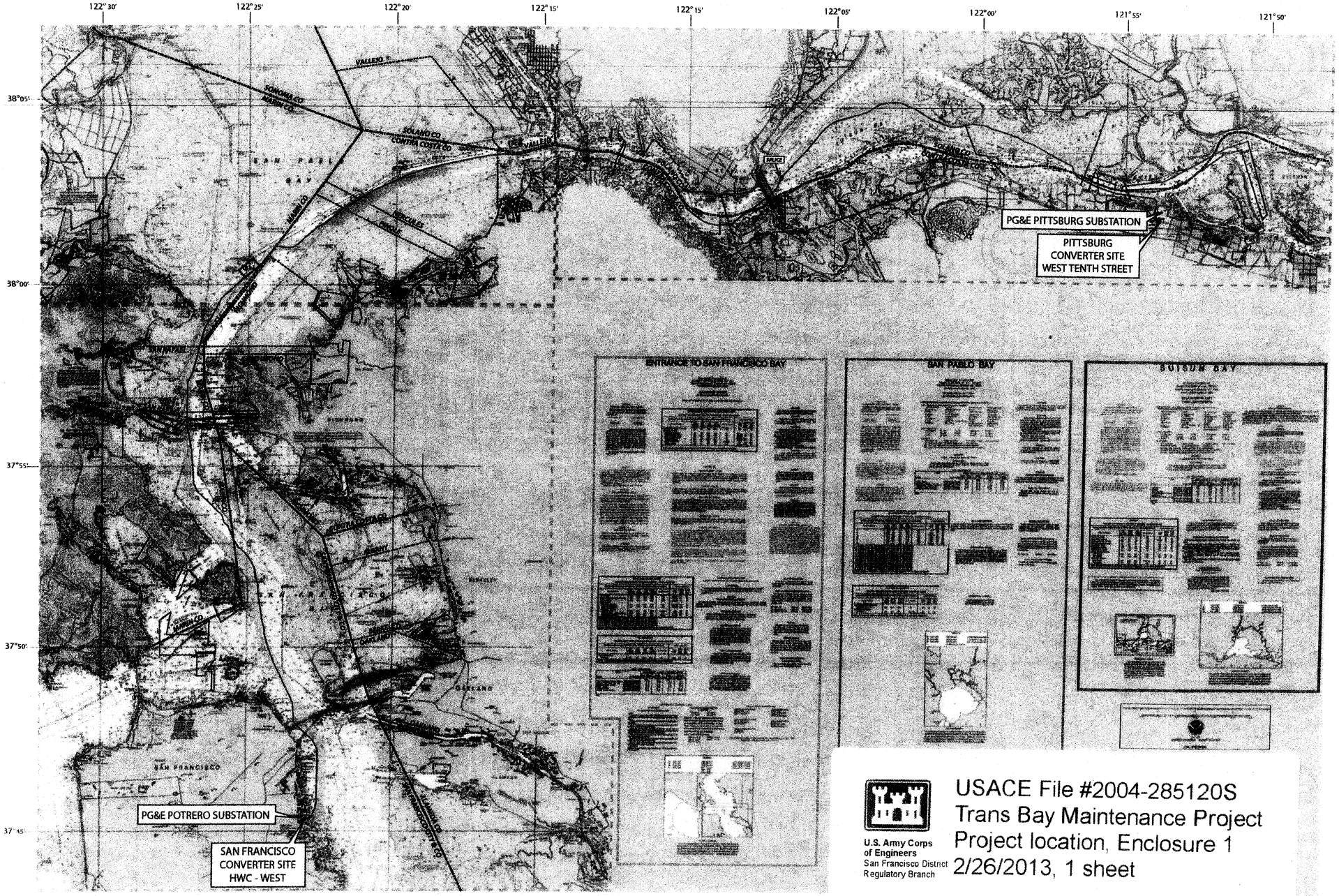

Source: Babcock & Brown. Transbay Cable Project, Final CD Cable Alignment, July 2007

Nautical Miles
1 .5 0 1 2 3

Yards
0 5000

2/18/13 vsa T:\Transbay Cable\Vicinity_Map_8.5x11.ai

U.S. Army Corps of Engineers
San Francisco Distrct
Regulatory Branch

USACE File #2004-285120S
Trans Bay Maintenance Project
Project location, Enclosure 1
2/26/2013, 1 sheet

Transbay Cable Maintenance Project
San Francisco to Pittburg, CA

February 2013

URS

VICINITY MAP

CONSTRUCTION MATTRESS

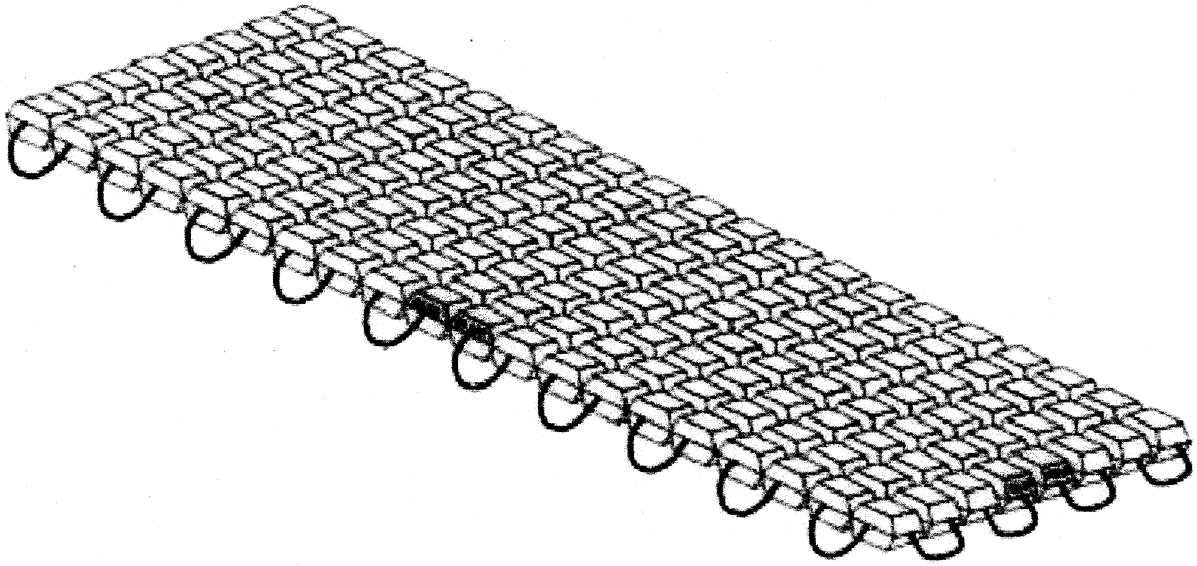

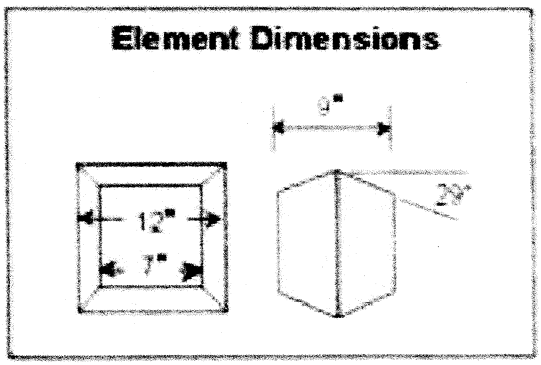

SPECIFICATIONS

MATTRESS TYPE: CONSTRUCTION
MATTRESS DIMENSIONS: 8' X 20' X 9"
MATTRESS WEIGHT: AIR 10,500 POUNDS
MATTRESS WEIGHT SUBMERGED: 6,000 POUNDS (APPROX.)
CONCRETE DENSITY: 145 LBS. PER CU. FT., 4,000 PSI
160 ELEMENTS: 5/8" ULTRA VIOLET STABILIZED COPOLYMER EXTRUDED FIBER ROPE, MINIMUM TENSILE STRENGTH 9,500 POUNDS

U.S. Army Corps of Engineers
San Francisco District

USACE File #2004-285120S
Trans Bay Maintenance Project
Concrete Mattress Layout, Enclosure 2
2/26/2013, 1 sheet