VICINITY MAP
NOT TO SCALE

PRELIMINARY ISSUE
THIS PLAN ISSUED FOR ADVANCE REVIEW OR OTHER PURPOSES

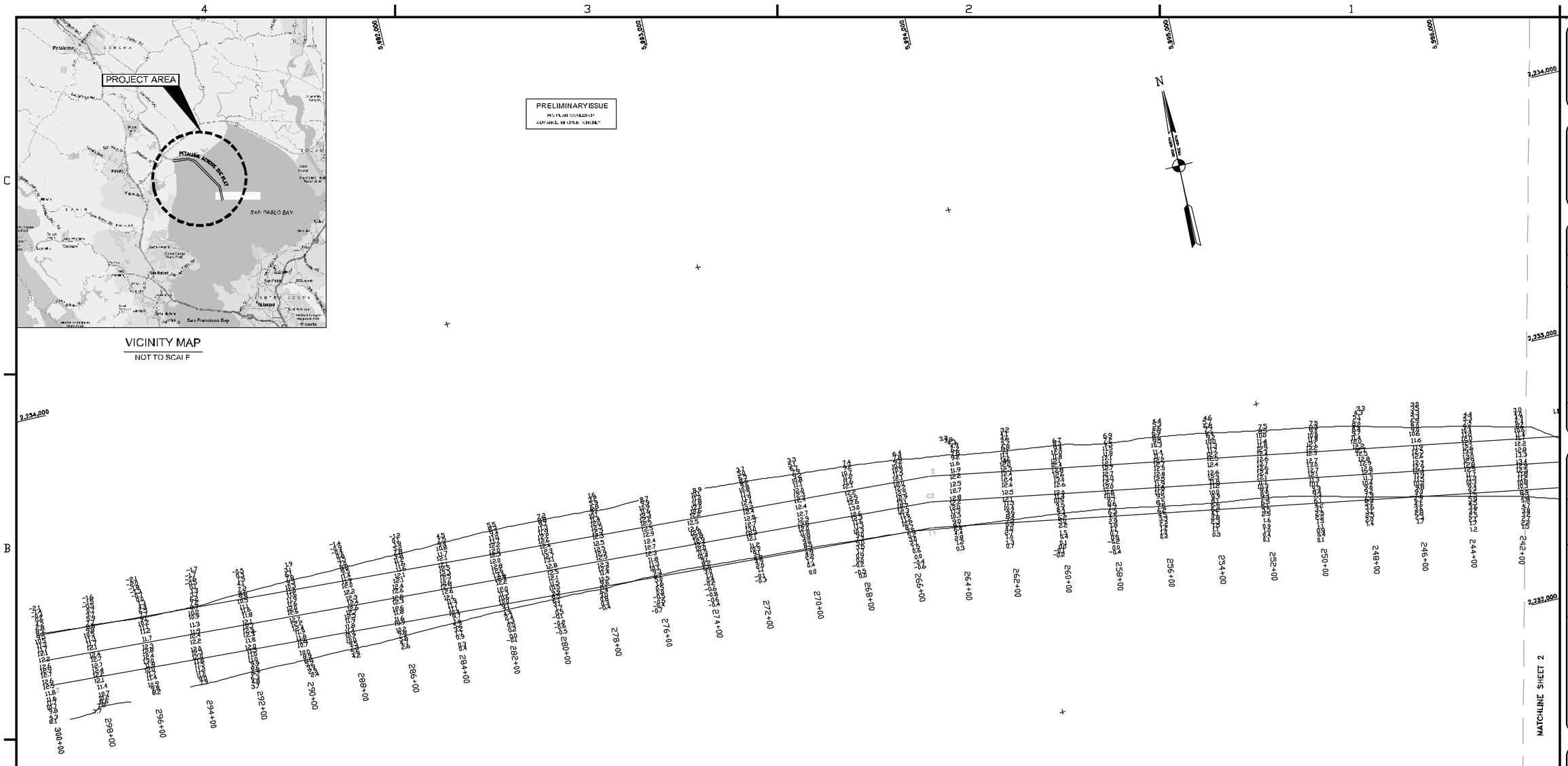

NOTES:

DRAWING NOT TO BE USED AS NAVIGATION CHART ONLY CHANNEL CONDITION AT DATE OF SURVEY THE LOCATION OF ALL NAVIGATION AIDS ARE BASED ON INFORMATION PROVIDED BY THE U.S. COAST GUARD BUOY LOCATIONS REPRESENT THE POSITION OF THE SINKER ONLY.

INFORMATION DEPICTED ON THIS MAP REPRESENTS THE RESULTS OF SURVEYS MADE ON THE DATES INDICATED AND CAN ONLY BE CONSIDERED AS INDICATING THE GENERAL CONDITIONS EXISTING AT THAT TIME.

SURVEYED BY THE CORPS OF ENGINEERS.

SOUNDINGS ARE TAKEN BY FATHOMETER AND ARE SHOWN TO THE NEAREST FOOT AND TENTHS OF A FOOT.

SOUNDINGS ARE BASED ON THE DATUM OF MEAN LOWER LOW WATER AT THE LOCALITY. NGVD 1929.

PLANE GRID, BEARING AND COORDINATES ARE BASED ON THE STATE OF CALIFORNIA COORDINATE SYSTEM, LAMBERT CONFORMAL PROJECTION, ZONE III NAD 83, CALIFORNIA, AS DESCRIBED IN SPECIAL PUBLICATION NO. 253, PUBLISHED BY NATIONAL OCEAN SURVEY.

THE PROJECT DEPTH IS 8 FEET AT M.L.L.W.

SOUNDINGS ARE BASED ON THE TIDE GAUGE LOCATED AT THE CHANNEL MARKER 4, 10, 16

HORIZONTAL CONTROL
COAST GUARD D-BEACON

VERTICAL CONTROL
BENCHMARK 1/4" DRILL HOLE, TOWILL MARK

NAD 1983
CENTERLINE ANGLE POINTS

∡ PT	X	Y
C1	5990' 86.70	2233'12.01
C2	5993963' .30	2232903.51
C3	5993334.20	2232 48' .31
C4	5993985.70	2232943.31
C5	5005'0.20	22'8'96.01
C6	5005'82.10	22'2101.21

NAD 1983
CHANNEL ANGLE POINTS

∡ PT	X	Y
1	5990'9'.10	2233'1'.91
2	5993997.20	2233001.21
3	5995355.30	2232911'.1
4	5999970.70	223'0'1.21
5	5005'0.90	22'8222.21
6	5005'82.10	22'2101.21
7	5005382.90	22'21'.51
8	5005'08.50	22'8'61.51
9	5999925.70	2230359.11
10	5995300.70	2232355.51
11	5993565.10	2232909.11
12	5990'82.70	2232912'.1

SHEET INDEX

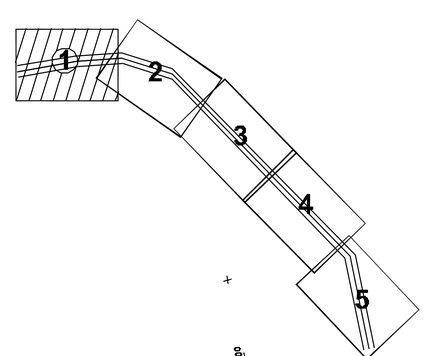

GRAPHICS SCALE 1" = 200'

200' 0 100' 200' 400' 800'

US Army Corps of Engineers
San Francisco District
333 Market Street
San Francisco, CA 94105

Mark	Description	Date	Appr.

SUBMITTED: TVW	DESIGNED BY:	CHECKED BY: PC	DRAWN BY: EWC
Hydro Survey Section	DATE:	SHEET NO.	DRAWING NO.
APPROVAL RECOMMENDED: 12/18/2003		1 OF 5	52 2 395
Chief, Engineering Branch	PREPARED UNDER THE DIRECTION OF MICHAEL McCORMICK		
APPROVED:	LT. COLONEL, C.E., DISTRICT ENGINEER		
Chief, Engineering & Technical Services Div.			

SONOMA COUNTY CALIFORNIA

PETALUMA RIVER ACROSS THE FLAT

CONDITION SURVEY
9–11 DECEMBER 2003

Sheet reference number
C1