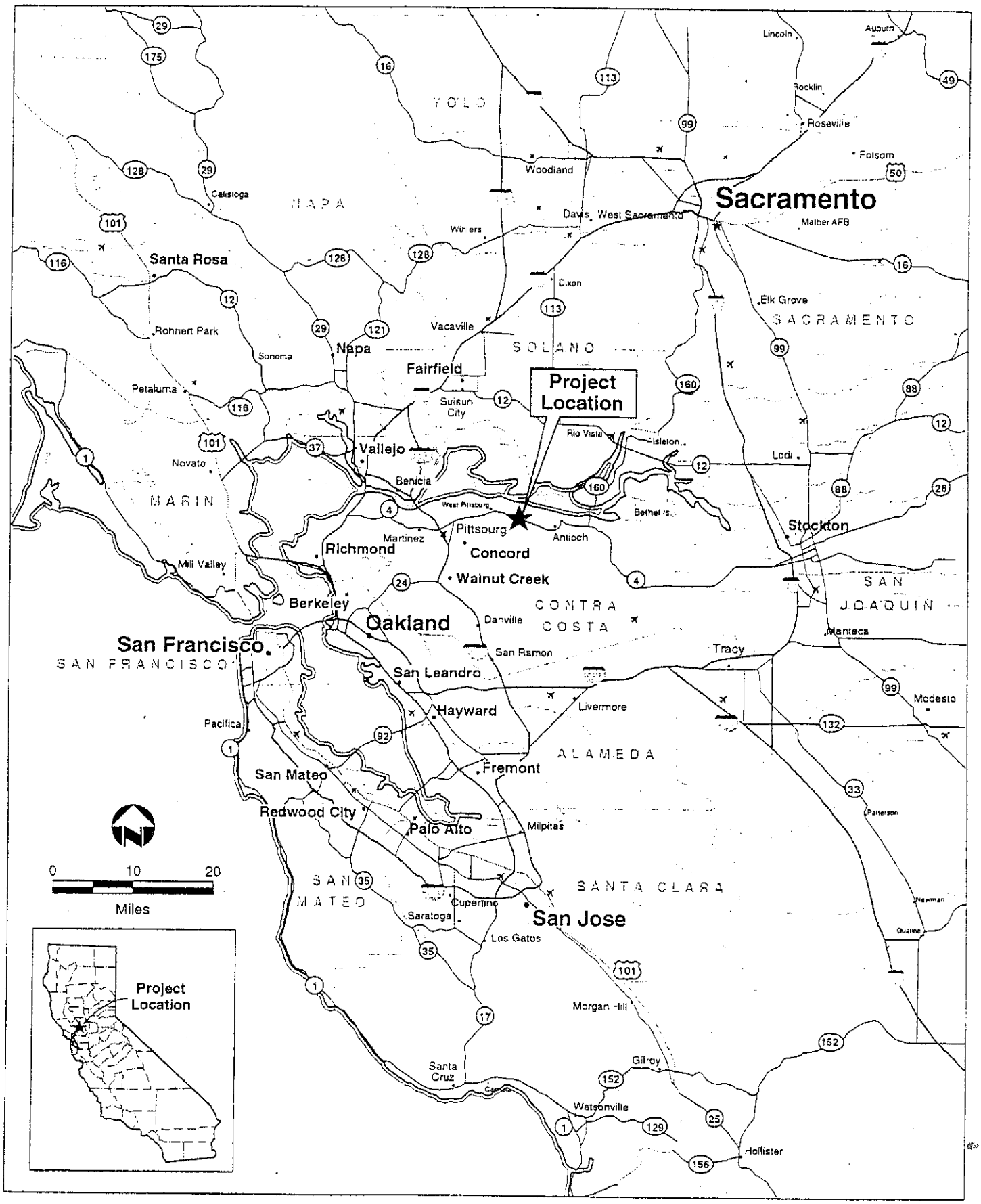

Project Vicinity Map

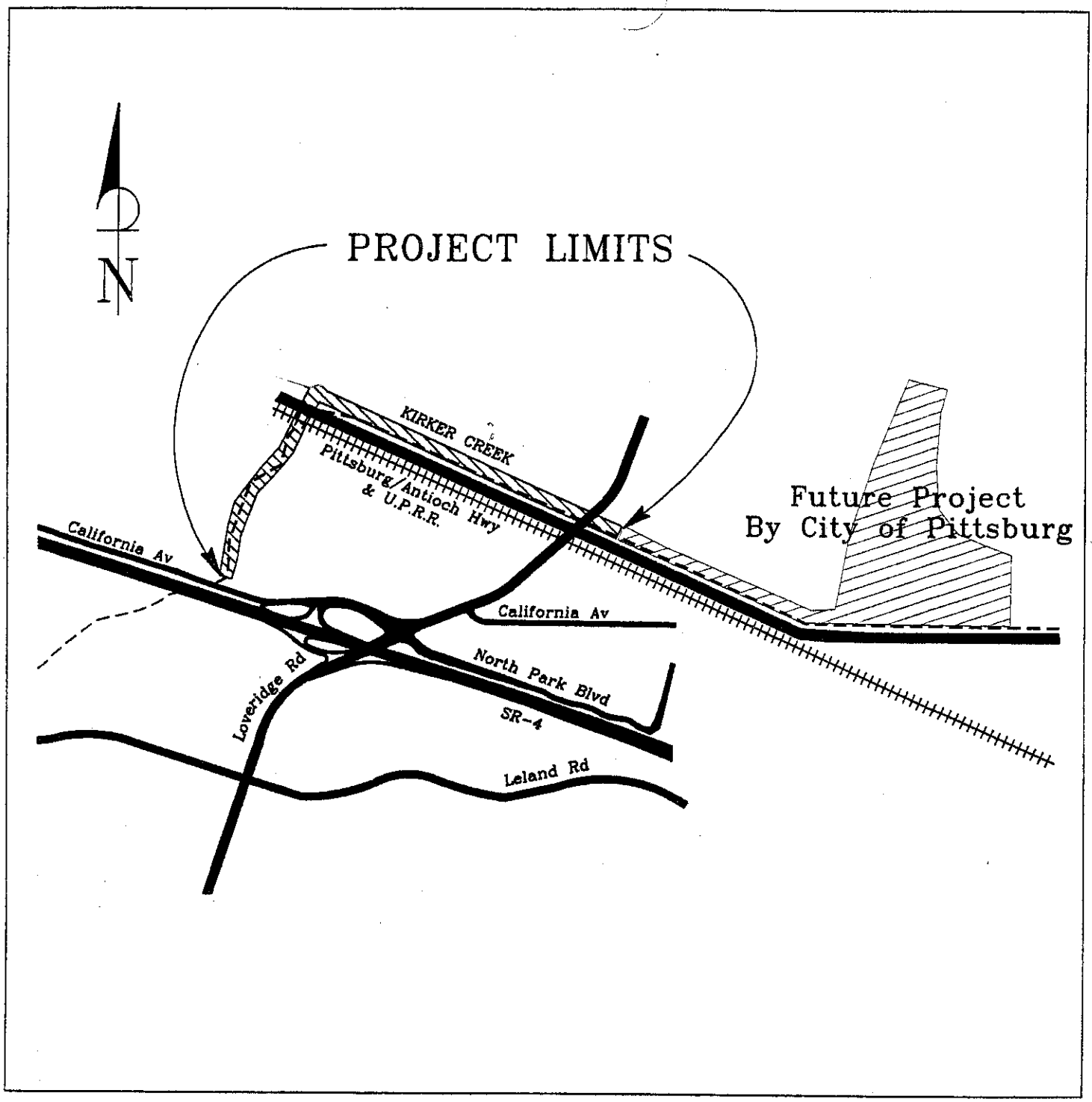

LOCATION MAP

SCALE: NTS

STATE ROUTE 4 FLOOD RELIEF PROJECT AT LOVERIDGE ROAD

WETLAND IMPACTS

	IMPACTS			CREATION		
	FWM Impacts	Open Water Impacts	Combined Impacts	Wetlands Creation	Uplands Creation	Combined Wetlands Creation
SEGMENT 1						
	0.02		0.02			
		0.19	0.19			
SEGMENT 2						
		0.11	0.11			
					0.44	0.44
				0.52		0.52
					0.95	0.95
SEGMENT 3						
		0.38	0.38			
		0.66	0.66			
	0.17		0.17			
	0.03		0.03			
				0.53		0.53
					1.12	1.12
				1.25		1.25
					2.44	2.44
				0.06		0.06
					0.03	0.03
TOTALS	0.22	1.34	1.56	2.36	4.98	7.34

KEY MAP

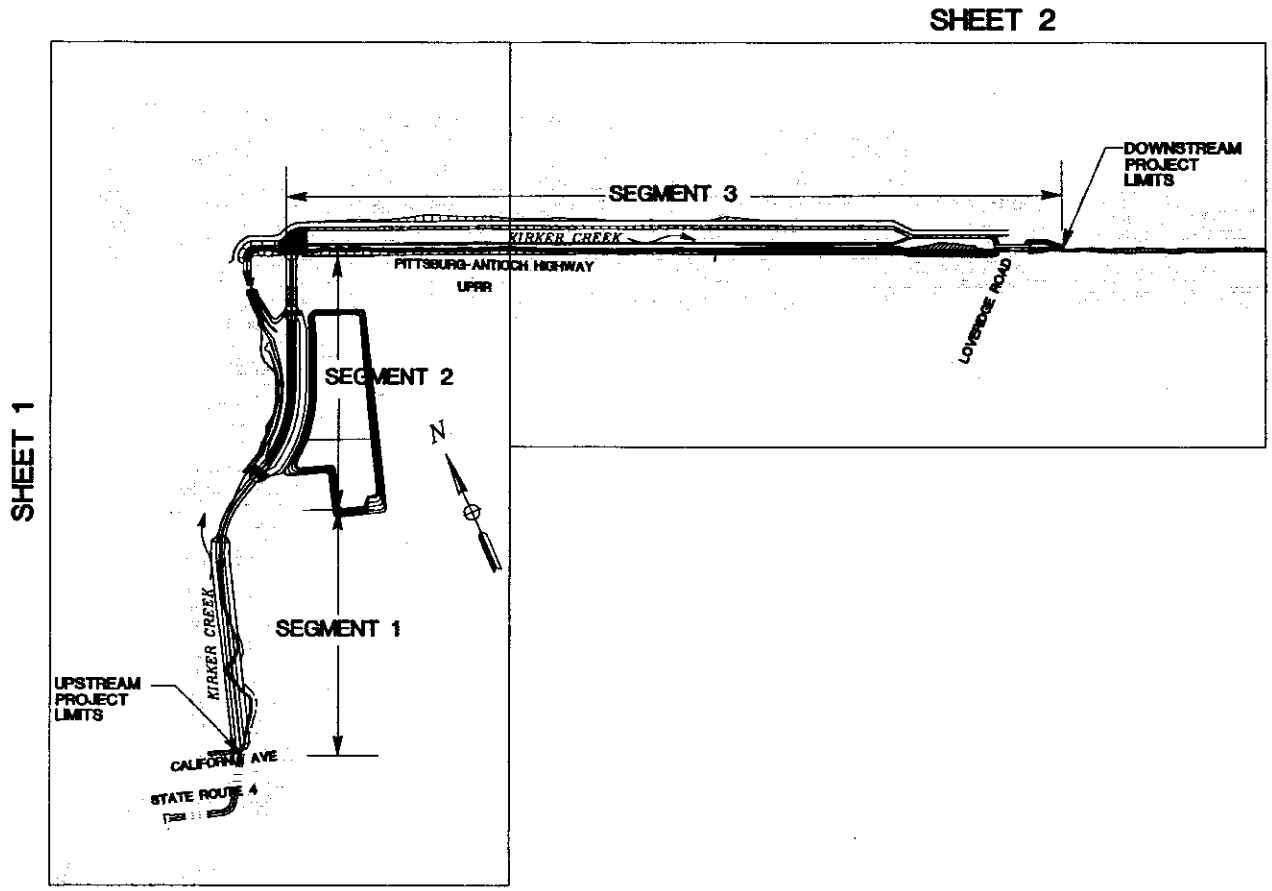

MARK THOMAS & CO. INC.
ENGINEERS ◆ SURVEYORS ◆ PLANNERS
1243 ALPINE ROAD, SUITE 222
WALNUT CREEK, CA 94596 (925) 938-0383

REGISTERED CIVIL ENGINEER DATE
PLANS APPROVAL DATE

NO.	DATE	APPROV.	REVISION

DESIGNED:	CB
DRAWN:	CW
CHECKED:	RTH
DATE:	07/00

STATE ROUTE 4
FLOOD RELIEF PROJECT
AT LOVERIDGE ROAD-
CORPS PERMIT APPLICATION

City of Pittsburg

SHEET NO.
KM-1

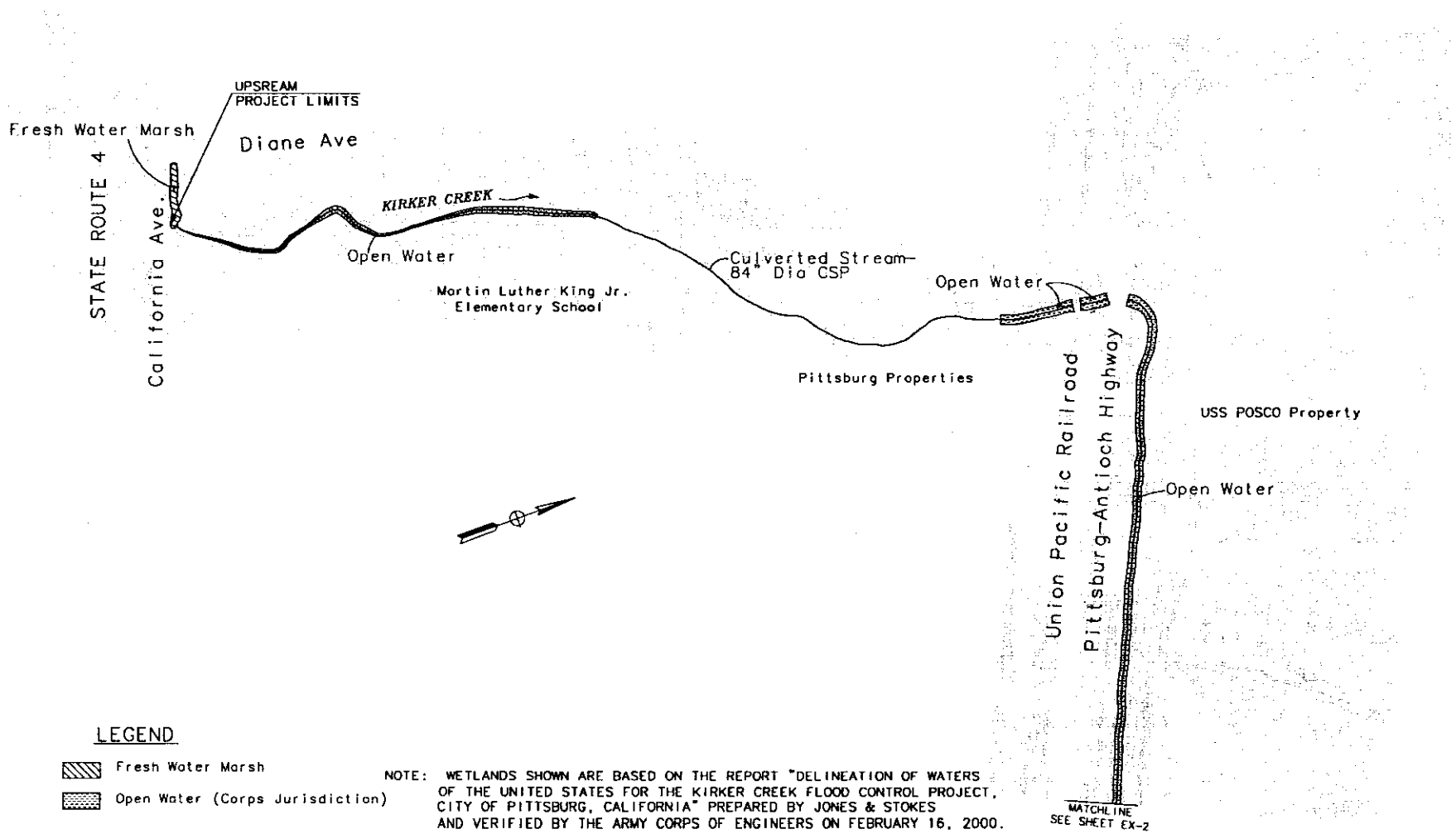

LEGEND

Fresh Water Marsh

Open Water (Corps Jurisdiction)

NOTE: WETLANDS SHOWN ARE BASED ON THE REPORT "DELINEATION OF WATERS OF THE UNITED STATES FOR THE KIRKER CREEK FLOOD CONTROL PROJECT, CITY OF PITTSBURG, CALIFORNIA" PREPARED BY JONES & STOKES AND VERIFIED BY THE ARMY CORPS OF ENGINEERS ON FEBRUARY 16, 2000.

SCALE 1"= 200'

EXISTING WETLANDS

MARK THOMAS & CO. INC.
ENGINEERS ◆ SURVEYORS ◆ PLANNERS
1243 ALPINE ROAD, SUITE 222
WALNUT CREEK, CA 94596 (925) 938-0383

REGISTERED CIVIL ENGINEER DATE

PLANS APPROVAL DATE

NO.	DATE	APPROV.	REVISION

DESIGNED:	CB
DRAWN:	CW
CHECKED:	RTH
DATE:	07/00

STATE ROUTE 4
FLOOD RELIEF PROJECT
AT LOVERIDGE ROAD-
CORPS PERMIT APPLICATION

City of Pittsburg

SHEET NO.
EX-1

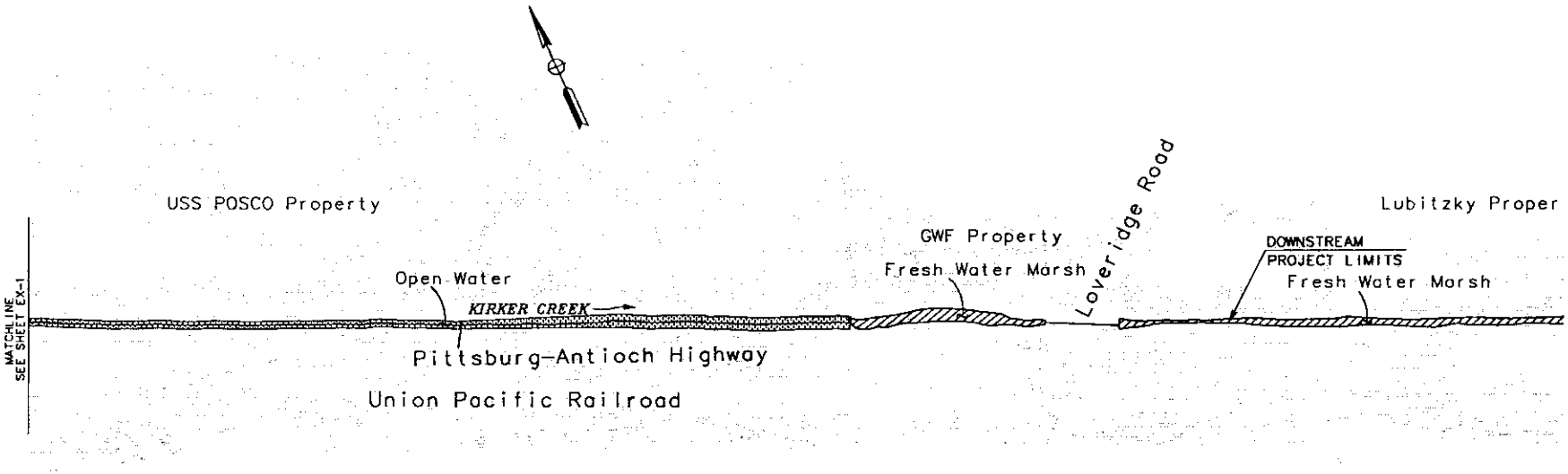

LEGEND

- Fresh Water Marsh
- Open Water (Corps Jurisdiction)

NOTE: WETLANDS SHOWN ARE BASED ON THE REPORT "DELINEATION OF WATERS OF THE UNITED STATES FOR THE KIRKER CREEK FLOOD CONTROL PROJECT, CITY OF PITTSBURG, CALIFORNIA" PREPARED BY JONES & STOKES AND VERIFIED BY THE ARMY CORPS OF ENGINEERS ON FEBRUARY 16, 2000.

SCALE 1"= 200'

EXISTING WETLANDS

MARK THOMAS & CO. INC.
ENGINEERS ◆ SURVEYORS ◆ PLANNERS
1243 ALPINE ROAD, SUITE 222
WALNUT CREEK, CA 94596 (925) 938-0383

REGISTERED CIVIL ENGINEER DATE

PLANS APPROVAL DATE

NO.	DATE	APPROV.	REVISION

DESIGNED:	CB
DRAWN:	CW
CHECKED:	RTH
DATE:	07/00

STATE ROUTE 4
FLOOD RELIEF PROJECT
AT LOVERIDGE ROAD-
CORPS PERMIT APPLICATION

City of Pittsburg

SHEET NO.
EX-2

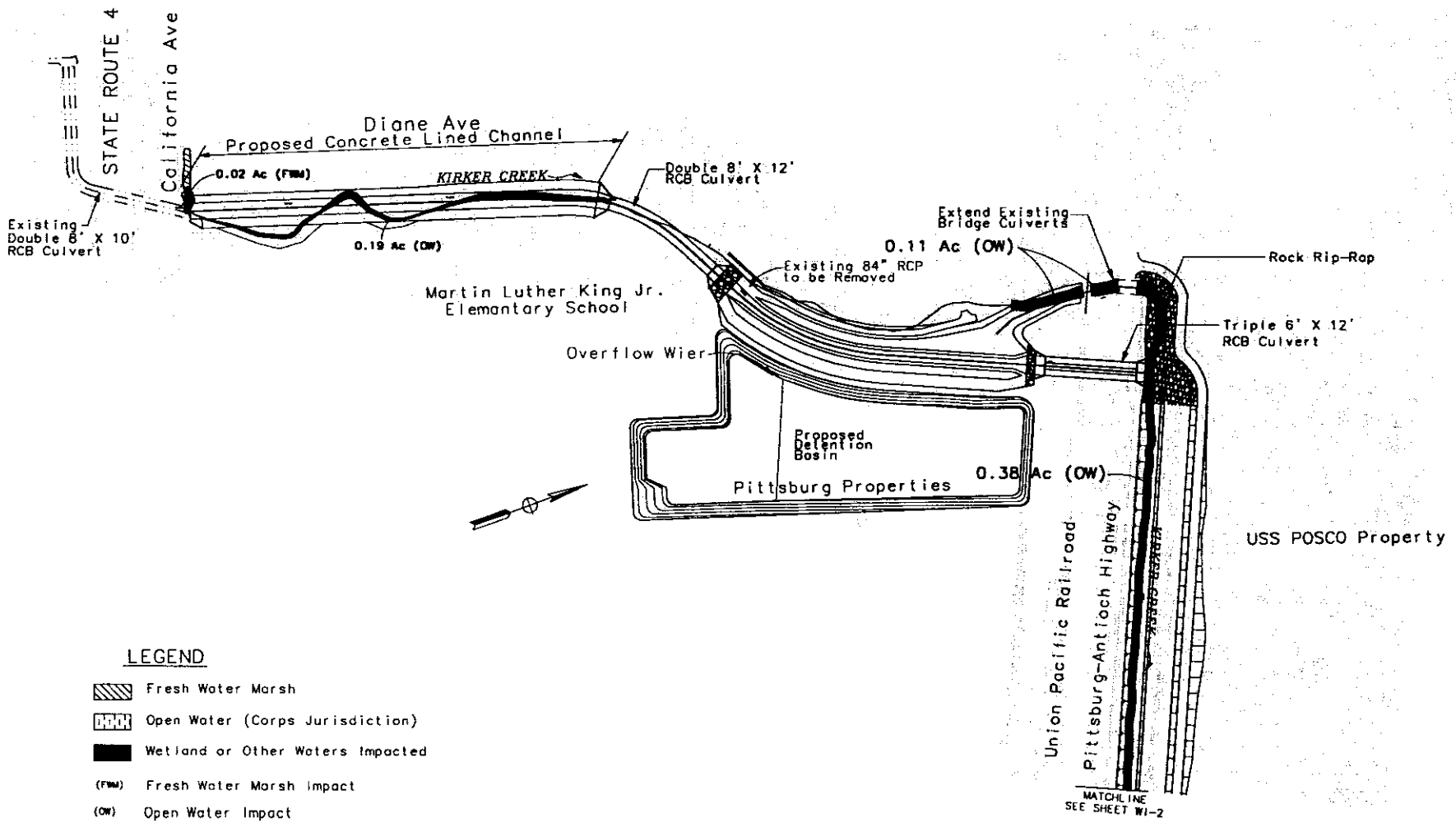

LEGEND

- Fresh Water Marsh
- Open Water (Corps Jurisdiction)
- Wetland or Other Waters Impacted
- (FWM) Fresh Water Marsh Impact
- (OW) Open Water Impact

SCALE 1"= 200'

WETLAND IMPACTS

MARK THOMAS & CO. INC.
ENGINEERS ◆ SURVEYORS ◆ PLANNERS
1243 ALPINE ROAD, SUITE 222
WALNUT CREEK, CA 94596 (925) 938-0383

REGISTERED CIVIL ENGINEER DATE
PLANS APPROVAL DATE

NO.	DATE	APPROV.	REVISION

DESIGNED:	CB
DRAWN:	CW
CHECKED:	RTH
DATE:	07/00

STATE ROUTE 4 FLOOD RELIEF PROJECT AT LOVERIDGE ROAD- CORPS PERMIT APPLICATION

City of Pittsburg

SHEET NO. WI-1

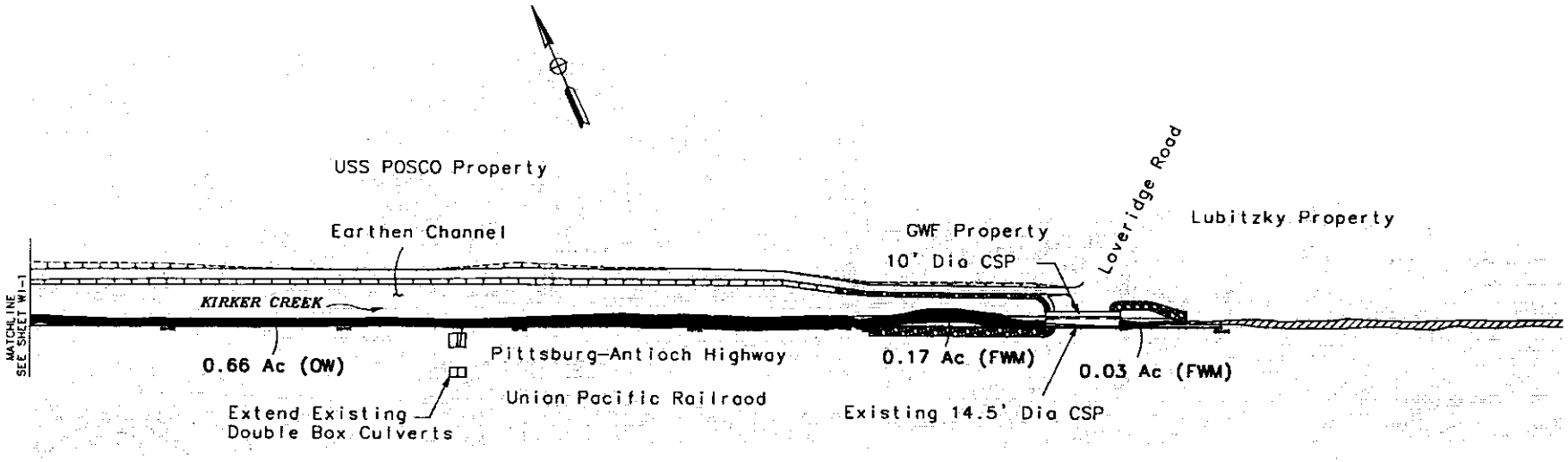

LEGEND

- Fresh Water Marsh
- Open Water (Corps Jusisdiction)
- Wetland or Other Waters Filled
- (FWM) Fresh Water Marsh Impact
- (OW) Open Water Impact

SCALE 1"= 200'

WETLAND IMPACTS

MARK THOMAS & CO. INC.
ENGINEERS ◆ SURVEYORS ◆ PLANNERS
1243 ALPINE ROAD, SUITE 222
WALNUT CREEK, CA 94596 (925) 938-0385

REGISTERED CIVIL ENGINEER DATE
PLANS APPROVAL DATE

NO.	DATE	APPROV.	REVISION

DESIGNED:	CB
DRAWN:	CW
CHECKED:	RTH
DATE:	07/00

STATE ROUTE 4 FLOOD RELIEF PROJECT AT LOVERIDGE ROAD- CORPS PERMIT APPLICATION

City of Pittsburg

SHEET NO. **WI-2**

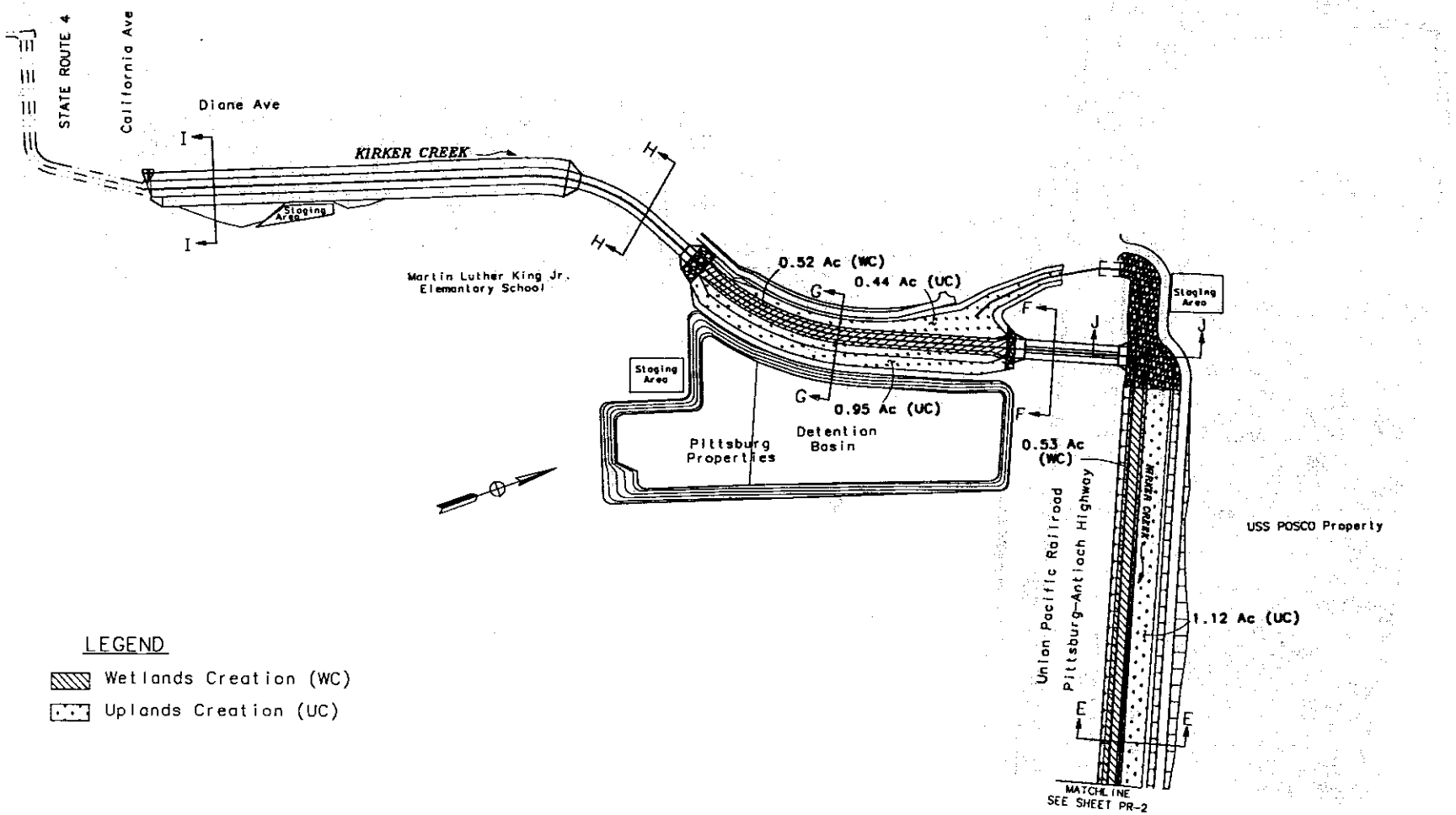

SCALE 1"= 200'

PROPOSED MITIGATION AREAS

MARK THOMAS & CO. INC.
ENGINEERS ◆ SURVEYORS ◆ PLANNERS
1243 ALPINE ROAD, SUITE 222
WALNUT CREEK, CA 94596 (925) 938-0383

REGISTERED CIVIL ENGINEER DATE
PLANS APPROVAL DATE

NO.	DATE	APPROV.	REVISION

DESIGNED:	CB
DRAWN:	CW
CHECKED:	RTH
DATE:	07/00

STATE ROUTE 4 FLOOD RELIEF PROJECT AT LOVERIDGE ROAD- CORPS PERMIT APPLICATION

City of Pittsburg

SHEET NO. PR-1

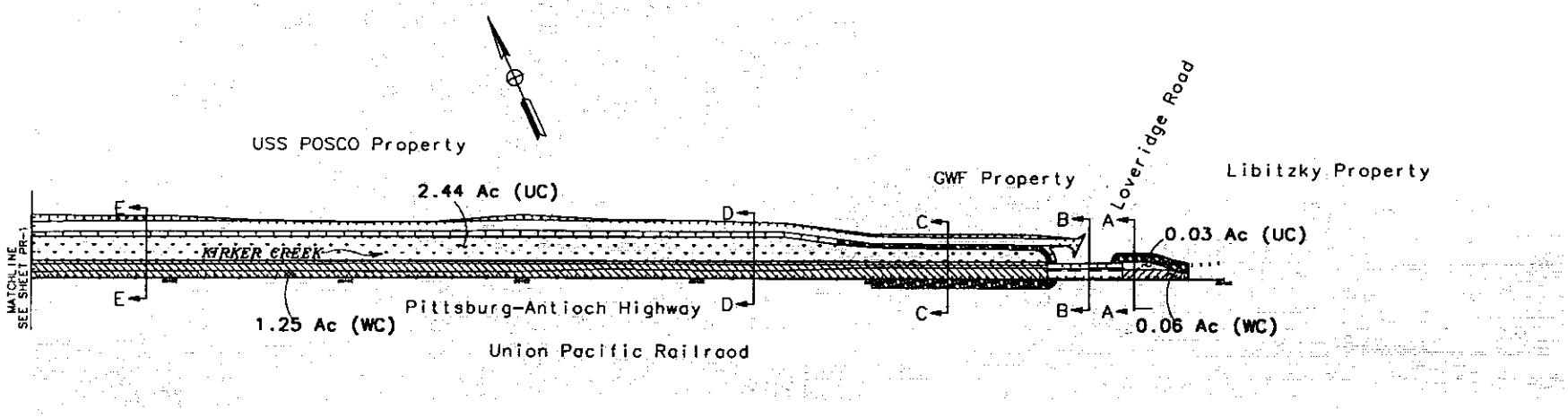

LEGEND

Wetlands Creation (WC)

Uplands Creation (UC)

SCALE 1"= 200'

PROPOSED MITIGATION AREAS

MARK THOMAS & CO. INC.
ENGINEERS ◆ SURVEYORS ◆ PLANNERS
1243 ALPINE ROAD, SUITE 222
WALNUT CREEK, CA 94596 (925) 938-0383

REGISTERED CIVIL ENGINEER DATE

PCOM APPROVAL DATE

NO.	DATE	APPROV.	REVISION

DESIGNED:	CB
DRAWN:	CW
CHECKED:	RTH
DATE:	07/00

STATE ROUTE 4
FLOOD RELIEF PROJECT
AT LOVERIDGE ROAD-
CORPS PERMIT APPLICATION

City of Pittsburg

SHEET NO.
PR-2

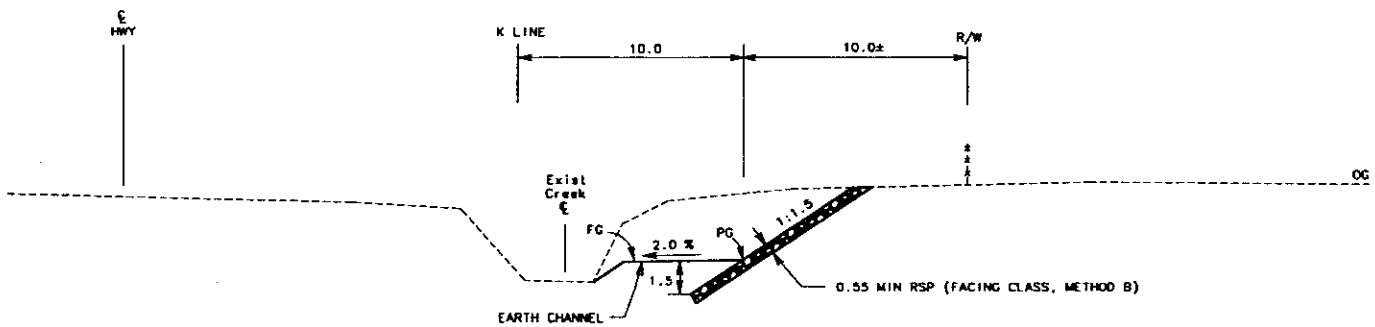

SECTION A-A

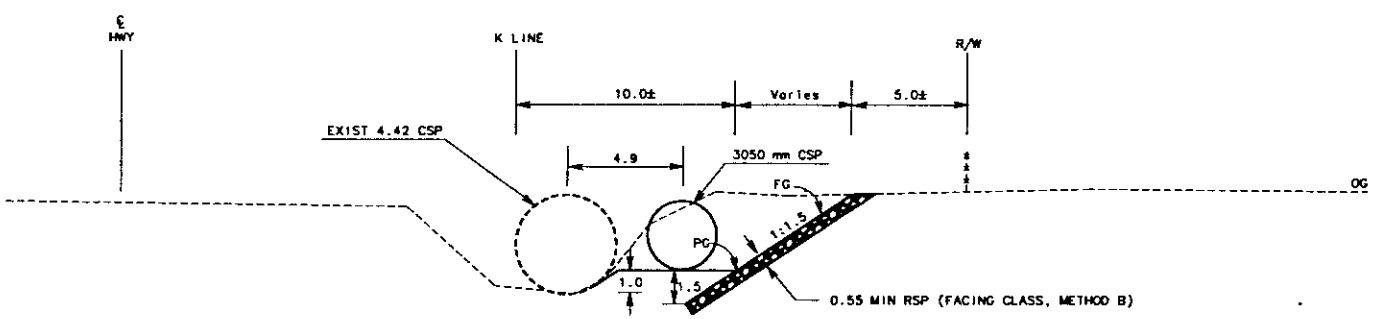

SECTION B-B

NO SCALE

TYPICAL SECTIONS

ALL DIMENSIONS ARE IN METERS UNLESS OTHERWISE NOTED

MARK THOMAS & CO. INC.
ENGINEERS ◆ SURVEYORS ◆ PLANNERS
1243 ALPINE ROAD, SUITE 222
WALNUT CREEK, CA 94596 (925) 938-0383

REGISTERED CIVIL ENGINEER DATE

PLANS APPROVAL DATE

NO.	DATE	APPROV.	REVISION

DESIGNED:	CB
DRAWN:	CW
CHECKED:	RTH
DATE:	05/00

STATE ROUTE 4
FLOOD RELIEF PROJECT
AT LOVERIDGE ROAD

City of Pittsburg

SHEET NO.
X-1

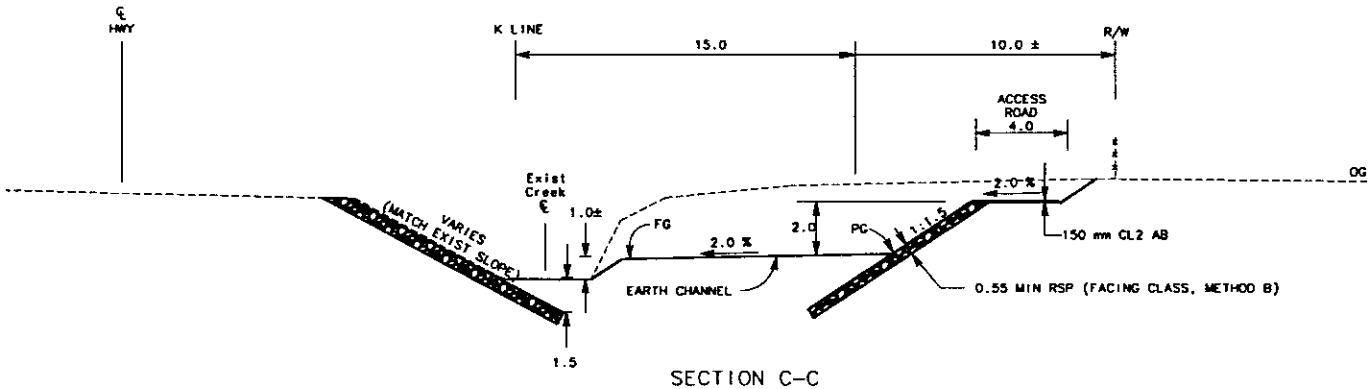

SECTION C-C

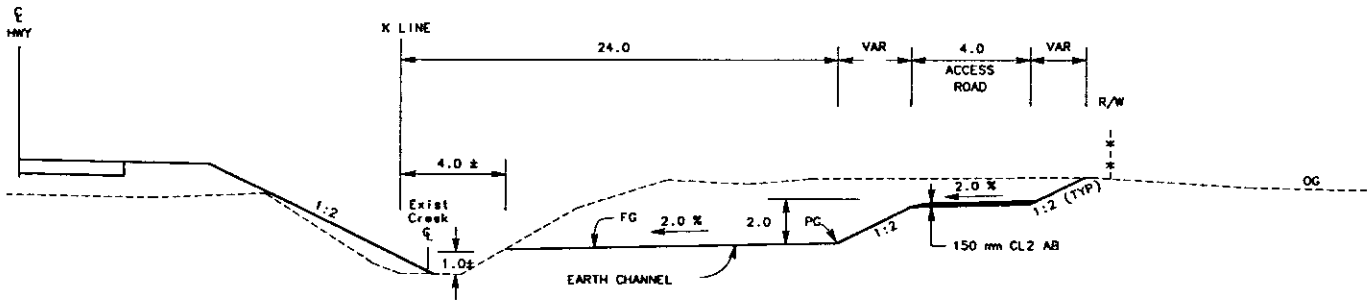

SECTION D-D

NO SCALE

TYPICAL SECTIONS

ALL DIMENSIONS ARE IN METERS UNLESS OTHERWISE NOTED

MARK THOMAS & CO. INC.
ENGINEERS ◆ SURVEYORS ◆ PLANNERS
1243 ALPINE ROAD, SUITE 222
WALNUT CREEK, CA 94596 (925) 938-0383

REGISTERED CIVIL ENGINEER DATE

PLANS APPROVAL DATE

NO.	DATE	APPROV.	REVISION

DESIGNED:	CB
DRAWN:	CW
CHECKED:	RTH
DATE:	05/00

STATE ROUTE 4
FLOOD RELIEF PROJECT
AT LOVERIDGE ROAD

City of Pittsburg

SHEET NO.
X-2

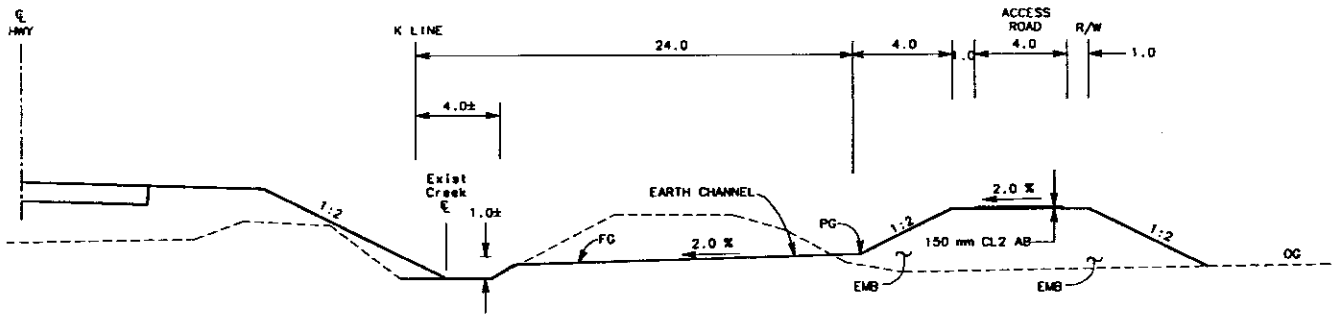

SECTION E-E

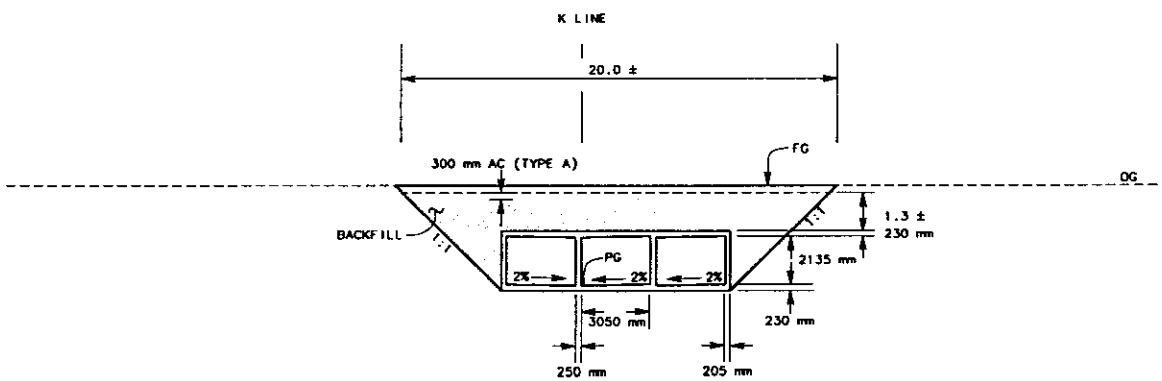

SECTION F-F

NO SCALE

TYPICAL SECTIONS

ALL DIMENSIONS ARE IN METERS UNLESS OTHERWISE NOTED

MARK THOMAS & CO. INC.
ENGINEERS ◆ SURVEYORS ◆ PLANNERS
1243 ALPINE ROAD, SUITE 222
WALNUT CREEK, CA 94596 (925) 938-0383

REGISTERED CIVIL ENGINEER DATE

PLANS APPROVAL DATE

NO.	DATE	APPROV.	REVISION

DESIGNED:	CB
DRAWN:	CW
CHECKED:	RTH
DATE:	05/00

STATE ROUTE 4
FLOOD RELIEF PROJECT
AT LOVERIDGE ROAD

City of Pittsburg

SHEET NO.
X-3

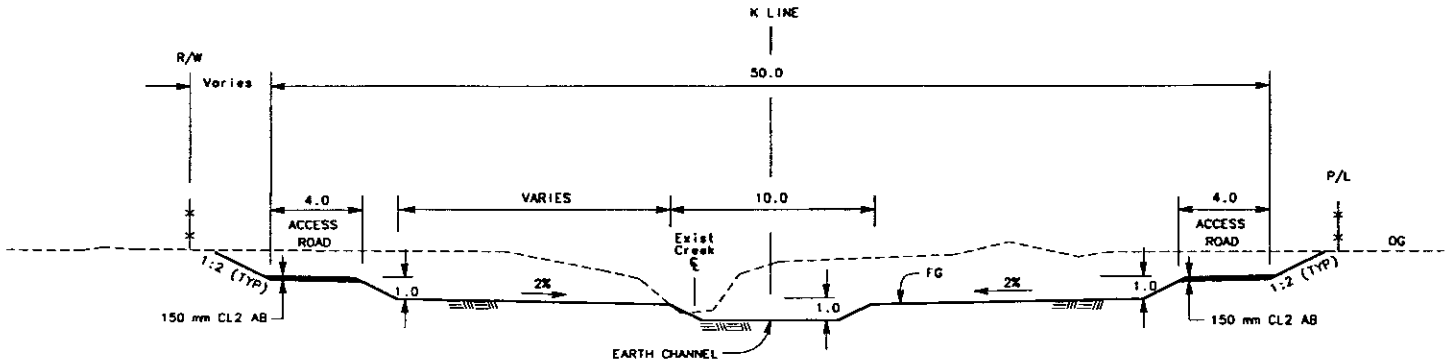

SECTION G-G

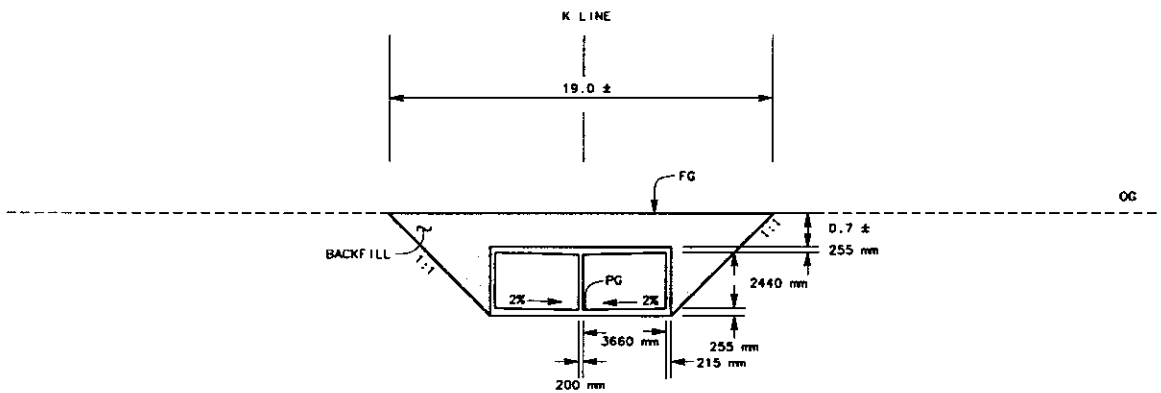

SECTION H-H

NO SCALE

TYPICAL SECTIONS

ALL DIMENSIONS ARE IN METERS UNLESS OTHERWISE NOTED

MARK THOMAS & CO. INC.
ENGINEERS ◆ SURVEYORS ◆ PLANNERS
1243 ALPINE ROAD, SUITE 222
WALNUT CREEK, CA 94596 (925) 938-0383

REGISTERED CIVIL ENGINEER DATE

PLANS APPROVAL DATE

NO.	DATE	APPROV.	REVISION

DESIGNED:	CB
DRAWN:	CW
CHECKED:	RTH
DATE:	05/00

STATE ROUTE 4
FLOOD RELIEF PROJECT
AT LOVERIDGE ROAD

City of Pittsburg

SHEET NO.
X-4

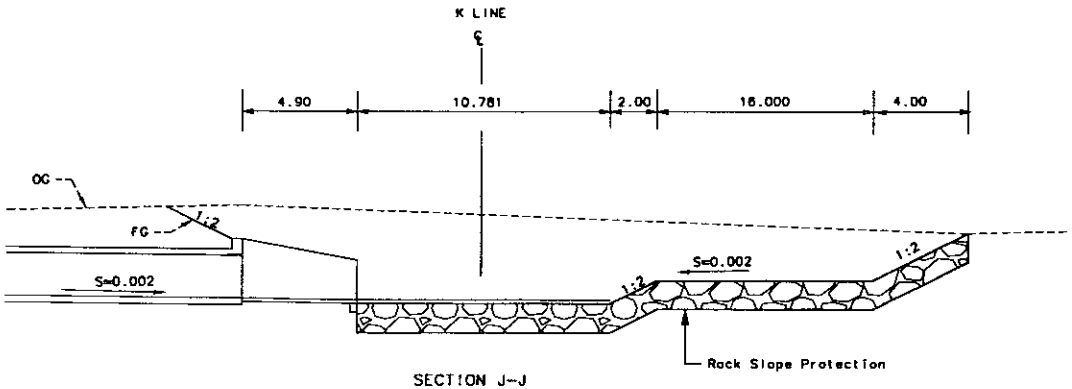

SECTION J-J

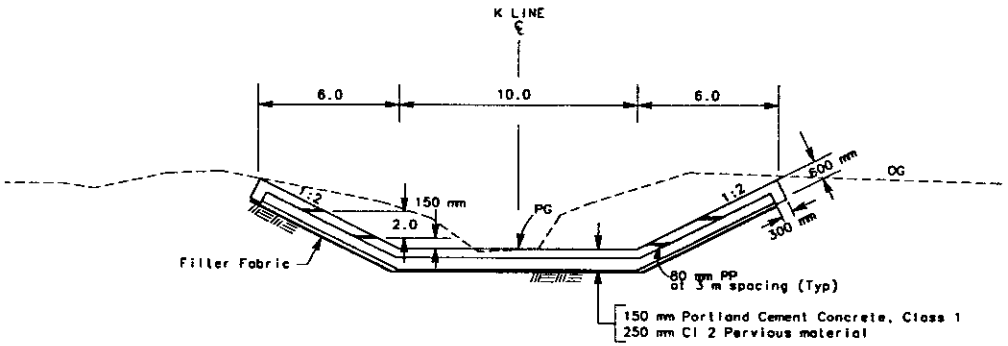

SECTION I-I

NO SCALE

TYPICAL SECTIONS

ALL DIMENSIONS ARE IN METERS UNLESS OTHERWISE NOTED

MARK THOMAS & CO. INC.
ENGINEERS ◆ SURVEYORS ◆ PLANNERS
1243 ALPINE ROAD, SUITE 222
WALNUT CREEK, CA 94596 (925) 938-0383

REGISTERED CIVIL ENGINEER DATE

PLANS APPROVAL DATE

NO.	DATE	APPROV.	REVISION

DESIGNED:	CB
DRAWN:	CW
CHECKED:	RTH
DATE:	05/00

STATE ROUTE 4
FLOOD RELIEF PROJECT
AT LOVERIDGE ROAD

City of Pittsburg

SHEET NO.
X-5