US Army Corps of Engineers®

SAN FRANCISCO DISTRICT

PUBLIC NOTICE

Regulatory Branch
333 Market Street
San Francisco, CA 94105-2197

NUMBER: 24982N DATE: 8 August 2000
RESPONSE REQUIRED BY: 7 September 2000

PROJECT MANAGER: Brian Wirtz TELEPHONE: (415) 977-8438 Email: Bwirtz@spd.usace.army.mil

1. Introduction: San Quentin State Prison, through the California Department of General Services, Real Estate Services Division, Direct Construction (contact: Lee Walker at 916-445-4219), has applied to the U.S. Army Corps of Engineers (USACE) for a permit to permanently fill 2.2 acres of shoreline below the high tide line in order to protect the shoreline from further erosion. The project is located at the San Quentin State Prison, Marin County, California (Figure 1). This application is being processed pursuant to the provisions of Section 404 of the Clean Water Act (33 U.S.C. 1344) and Section 10 of the River and Harbors Act of 1899 (33 U.S.C. 403).

2. Project Description: As shown in the attached drawings, the San Quentin Shoreline Repairs - Phase II Final Measures (proposed project) long-term shoreline repair entails constructing a segmented retaining wall with rip-rap shoreline protection. Because of the critical importance of the facility, the retaining wall approach was selected based on its long-term viability and minimal Bay fill as compared to other options. The proposed project would include the following major components: (1) a shoreline retaining wall approximately 1,215 feet long and 15 feet tall (11 feet exposed), (2) a splash wall along the employee parking lot with top of wall elevation at approximately 10 feet, and (3) rock slope protection for the retaining wall toe, for the employee parking lot area, and for ferry wash protection west of Guard Tower #3. Figures 1-14 show the proposed work.

The shoreline retaining wall would be a total of approximately 1,215 feet long with a top of wall elevation at about 15 feet National Geodetic Vertical Datum (NGVD). The wall would consist of pre-cast columns or pilasters embedded in drilled piers with precast 12-inch thick concrete panels between the columns. The pilasters would have a smooth concrete finish. A cast-in-place horizontal reveal will be located about 14 inches from the top of the pilasters, providing a resemblance to the treatment of the buttressed elements on the prison buildings near the shoreline. A precast architectural feature will be added to the outer surface of the pilasters, tapered from 6 inches at the top to about 14 inches at the bottom, covering about 40 percent of the pilaster face and ending about 12 inches below the top of the rip-rap at the toe of the retaining wall. This architectural feature will enhance shadow lines and continue the buttress effect from the prison buildings. Figure 16 shows this feature.

Tiebacks would be used to anchor the retaining wall to the existing shoreline (Figure 10). Surface runoff behind the wall would be collected in a v-gutter along the back of the wall. Storm drain drop inlets located every 150 feet would collect the runoff and discharge it via closed pipe through the base of the wall, just above the rip-rap toe protection (Figure 13). A rock drain curtain placed along the back of the wall would collect seepage, and weep holes located at 7.5 feet on center would allow collected water to drain.

The crest of the existing slope ranges from 9 feet NGVD at the south end of the site to elevation 24 feet NGVD at Guard Tower #3 and rises to elevation 45 feet NGVD approximately 150 feet south of New Guard Tower #2. From there the hillside crest elevation remains fairly constant until the Cafeteria, where the crest elevation drops to 15 feet NGVD. Along the parking lot the hillside crest elevation gradually drops to elevation 10 feet NGVD. The backfill material behind the retaining wall would be graded to a final slope of between 1.75-to-1 and 2-to-1 and would be landscaped with low-growing California native plant species appropriate to the local area.

Figure 15 shows the landscaping plan. Near New Guard Tower #2, a concrete staircase would be installed on the finished slope to provide access to the top of the retaining wall for site maintenance purposes (Figure 14). At the west end of the retaining wall at the existing rock outcropping, the new slope would be partially covered with rock selected to visually enhance the appearanceand to provide a transition between the existing rock outcrop and the new native landscaping; the rocks would be no more than 12 to 18 inches in diameter for security reasons.

The toe of the slope in front of the retaining wall would be

rehabilitated with rip-rap shoreline protection down to approximately 6 feet below mean high tide (about 3 to 8 feet below the existing shoreline). The rip-rap would be placed into a trench excavated from the existing shoreline and will extend above the existing grade only as it approaches the wall, resulting in a minimal change in net volume.

The project would include a splash wall approximately 400 feet long with a top of wall elevation at 10 feet NGVD in the vicinity of the lower employee parking lot (Figure 5). Rip-rap shoreline protection would be placed at the toe of the splash wall and into the existing shoreline down to approximately minus 4 feet NGVD. Replacement fill and asphalt concrete curbing would be installed to repair and replace damaged parking stalls.

Ferry wash protection would be installed at the southern tip of the shoreline west of Guard Tower #3 (Figure 3). In this area, rip-rap protection would be placed along approximately 466 linear feet of shoreline to protect this part of the shoreline from the frequent wave action caused by passing ferries. Rip-rap shoreline protection in this area would be installed on fabric placed on top of the shoreline; no excavation of the existing shoreline would be necessary.

To allow for equipment access along the shoreline, a temporary sheet pile barrier wall would be driven into the outside edge of rip-rap placement (See Figures 10-12). This barrier would also function as a siltation barrier and protect the work area from wave action. Dewatering equipment would be used to control seawater within the work area. If necessary, temporary sedimentation tanks would be used to remove sediment and allow discharge of the removed water to the bay.

The applicant has not proposed mitigation. There are no special aquatic areas within the project area, and the site consists of a combination of rock shoreline and historic fill. Because the project would simply return the shoreline to historic conditions, and because the project would not result in more than minimal impacts to aquatic habitat, there is no need to mitigate.

Purpose and Need: The applicant states that the purpose of this project is to stabilize shoreline slopes at the San Quentin State Prison which were damaged by a combination of wind, rain, and wave actionduring severe storms in January and February 1998. Interim mitigation measures were implemented in 1998 (USACE file no. 23939N) to temporarily stabilize the storm-damaged slopes. The proposed project would install a shoreline retaining wall and other shoreline protection measures that would provide a long-term buffer against future erosion damage.

3. State Approvals: State water quality certification or waiver is a prerequisite for the issuance of a USACE permit to conduct any activity which may result in a fill or pollutant discharge into waters of the United States, pursuant to Section 401 of the Clean Water Act (33 U.S.C. 1341). The applicant requested a State water quality certification on September 29, 1997. No USACE permit will be granted until the applicant obtains the required certification or waiver. A waiver should be explicit or it may be presumed if the State fails or refuses to act on a valid request for certification within 60 days of receipt, unless the District Engineer determines a shorter or longer period is reasonable for the State to act. Water quality issues should be directed to the Executive Officer, California Regional Water Quality Control Board, San Francisco Bay Region, 1515 Clay Street, Suite 1400, Oakland, California 94612, by the close of the comment period.

The project is subject to the jurisdictional purview of the San Francisco Bay Conservation and Development Commission (BCDC). The applicant is in contact with BCDC and is pursuing a permit.

4. Preliminary Environmental Effects: The USACE has assessed the environmental effects of the action proposed in accordance with the requirements of the National Environmental Policy Act of 1969 (Public Law 91-190), the Council on Environmental Quality's Regulations at 40 CFR 1500-1508, and USACE Regulations at 33 CFR 230 and 325. Unless otherwise stated, this preliminary assessment describes only the direct, indirect, and cumulative effects that would result from regulated activities within the jurisdiction of the USACE.

This assessment resulted in the following findings:

Effects on the Physical Environment:

a. Substrate: The subsurface materials underlying the project site are comprised of a heterogeneous mixture of non-engineered fill that has eroded. Approximately 13,000 cubic yards of clean fill will be placed in the water to stabilize the existing shoreline. The project would result in the placement of fill in 2.2 acres of shoreline subject to USACE jurisdiction. This fill would be permanent.

Overall effects on the substrate are determined to be long-term in magnitude.

b. Erosion and Sedimentation: Earth movement during construction of the project will increase potential erosion during construction. The measures include sheet piling and sedimentation basins (if needed) to reduce potential off-site sediment movement to a minimal level.

The project would substantially reduce further erosion of the shoreline at San Quentin. No additional erosion or sedimentation other than temporary sedimentation caused during construction (see discussion above) would be created by the project. The general pattern of storm drainage across the project site would not substantially change with the project. Runoff from the project site currently flows directly into San Francisco Bay via sheet flow. With the proposed project, stormwater runoff would collect in the V-gutter behind the shoreline retaining wall to be discharged to the Bay from a pipe at the base of the wall. Seepage behind the wall would flow into the Bay through regularly spaced weep holes along the wall, as described above under "Drainage Patterns." Therefore, the project would not substantially alter the drainage pattern of the site such that substantial erosion or siltation would occur.

Effects on erosion and sedimentation are expected to be adverse, short-term in nature, and minor to in magnitude during construction. The potential for these effects will occur until the project is complete. Long-term effects will be beneficial in nature and minor to moderate in magnitude.

c. Water Quality: Water quality may be impacted from the filling activity and may include sedimentation. This is discussed above in the section entitled "Erosion and Sedimentation".

d. Air Quality: Based on the size of the proposed project and limited to an evaluation of air quality effects only within USACE jurisdictional areas, the total direct and non-direct project emissions would not exceed the de minimis threshold levels of 40 CFR 93.153. Therefore, the proposed project would conform to the State Air Quality Implementation Plan (SIP) for California. The project effects on air quality would be short-term in nature and minor in magnitude.

e. Noise Conditions: The existing noise environment is dominated by the activities of the prison and wave-action of the Bay. Construction of the proposed project would cause short-term and intermittent noise impacts to nearby residents located outside of the prison property and to prisoners. In order to reduce the impacts of construction noise on nearby receptors, the project would limit construction to daytime hours (generally from 8:00 a.m. to 7:00 p.m.) so that prison occupants or residential receptors would not be disturbed. In addition, the project sponsor would require the construction contractor to notify adjacent residents of scheduled construction activity, particularly piledriving activity. Noise impacts caused by the proposed project are expected to be about six months. Adverse effects from noise due to construction activities would be short-term in nature and minor in magnitude.

f. Wave Action: The top of the shore protection at the project site would be at least 12.5 feet above mean high water. This design ensures there is little likelihood of overtopping by tsunami.

Because of the severe nature of the recent El Niño storm damage, additional analysis of storm waves was included in the design of the proposed shoreline protection system. Wave run-up is computed as a function of the design wave height added to the design tide level established at the affected shoreline and protective structures. Because of the slope of the proposed revetment and the elevation of the proposed retaining wall, maximum wave run-ups range from about 7.3 feet above mean sea level at the revetment to about 8.2 feet above mean sea level at the lowest portion of the wall.

Wave erosion is a process that can begin downslope of the toe of a protective structure and work its way up to undermine the structure. Consequently, the U.S. Army Corps of Engineers recommends, in their Shoreline Protection Manual (1984), that the design accommodate potential wave scour to a depth below the natural wave bed equal to the "significant wave height," in this case 4.0 feet, below the design tide level for the project area (about 1.6 feet below mean sea level). Therefore, the erosion protection systems for the project area have been designed to accommodate wave scour to an elevation of 5.6 feet below mean sea level.

Because the retaining wall at the project site would be close to the mean high water line, most waves would break before reaching the wall, thus diffusing wave reflection. Because of this design, the energy of the reflected wave

would be only about 4 % of the incoming wave energy. Because the toe protection would extend through the wave run-up zone, nearly all wave energy would be diffused and would be less than the erosive energy presently affecting the shoreline.

Effects to the Biological Environment:

a. Endangered Species: Federally-listed endangered or threatened species occurring in the vicinity of the site include the California brown pelican (*Pelecanus occidentalis californicus*); American peregrine falcon (*Falco peregrinus anatum*); steelhead trout (*Oncorhynchus mykiss*); adult winter-run, spring-run, and fall/late-fall chinook salmon (*Oncorhynchus tshawytscha*); Salt-marsh harvest mouse (*Reithrodontomys raviventris*); and California clapper rail (*Rallus longirostris levipes*).

The California brown pelican is a migratory species that is a resident in the San Francisco Bay Area during the summer months. No perches that could be used by resting pelicans are present in the project vicinity or immediately off-shore. No brown pelicans were observed in San Francisco Bay in the vicinity of the project during field surveys conducted in July and August 1998.

American peregrine falcons are known to nest on open ledges, caves, and potholes on high vertical cliffs near lakes or rivers. In the vicinity of the project, peregrine falcons have exhibited potential nesting behavior in the vicinity of the towers of the Richmond-San Rafael Bridge, but no appropriate nesting or foraging sites for the peregrine falcon occur in the vicinity of the project site.

Central Valley steelhead trout were classified as Federally threatened in May 1998. The steelhead that occur in San Francisco and San Pablo Bays are included in this ESU (evolutionarily significant unit), and therefore receive protection under the Federal Endangered Species Act. Steelhead adults generally migrate through San Francisco Bay to spawning areas along the Sacramento River system during late fall and winter. After a period of fresh water residence, juvenile steelhead typically travel downstream to the Pacific Ocean during the spring, but migration could occur year-round in the projectarea in small numbers. The movements of adult and juveniles are thought to be rapid during migrations. Although a small number of steelhead are known to enter Corte Madera Creek, approximately one mile west of the project site, they are not common in the vicinity of the project and construction of the project would not adversely affect this species.

Adult winter-run chinook salmon migrate through San Francisco Bay to spawning areas in the upper Sacramento River during the late fall and early winter. Juveniles travel downstream through the Bay and into the Pacific Ocean in the late fall as well. The movements of adult and juvenile salmon are thought to be rapid during these migrations. The project site is located in a portion of San Francisco Bay designated as critical habitat for the species by the National Marine Fisheries Service (NMFS).

Central Valley spring-run chinook salmon were proposed for Federal listing as endangered on March 9, 1998. Fall/late-fall chinook salmon are proposed for Federal listing as threatened by NMFS. The proposed critical habitat for both is the same and includes all waters of San Francisco Bay north of the Bay Bridge. Because water quality protection measures would be incorporated into the project to avoid turbidity during the construction period, no potentially adverse impacts to winter-run chinook salmon or Central Valley spring-run chinook salmon that might be near the project site are anticipated.

The salt-marsh harvest mouse and California clapper rail occur in northern coastal salt marsh habitat dominated by pickleweed (*Salicornia virginica*). There is no salt marsh habitat and no pickleweed in the vicinity of San Quentin.

The proposed project would not have adverse effects on any of these species. Should new information demonstrate endangered species are present on the project site, USACE will consult with U.S. Fish and Wildlife Service and/or NMFS as required by Section 7 of the Endangered Species Act.

b. Habitat for Fish, Other Aquatic Organisms, and Wildlife: On the west side of San Francisco Bay, a breeding colony of harbor seals (*Phoca vitulina*) is located within the Corte Madera Ecological Reserve, approximately 0.9 to 1.0 mile west of San Quentin. As it has been observed that human activity occurring at a distance greater than 300 feet from harbor seal haul-outs does not result in disturbance to harbor seals, construction of the project would not adversely affect harbor seals and would not violate the Marine Mammal Protection Act of 1972, which protects certain marine mammals against harassment.

Environmental effects on wildlife and other aquatic organisms are presumed to be short-term in nature and minor in magnitude.

Effects To The Social And Economic Environment:

a. Aesthetic Quality: Architectural treatment of the shoreline retaining wall would mimic the existing architecture at San Quentin; concrete pilasters of the shoreline retaining wall cast into the piers' foundations would mimic pilasters visible in the San Quentin architecture. The retaining wall would be visible from the Richmond-San Rafael Bridge, Corte Madera, the harbor at Larkspur, and from passing boats including the Larkspur Ferry. As the existing shoreline is not a unique visual resource, and views are dominated by the prison buildings which would not be changed by the proposed project, the proposed retaining wall would alter views of the site but would not substantially affect a scenic vista.

Effects to aesthetic quality as a result of this project are presumed to be minor to moderate in magnitude.

b. Recreational Opportunities: The project site is not intended for recreational use.

c. Transportation (Navigation): The project would not affect existing or expected future water travel; in particular, the project would not affect travel by the Larkspur Ferry that uses the adjacent channel.

d. Public Health and Safety: The project would protect the physical integrity of Guard Towers #2 and #3. The base of the slope upon which these towers are built have eroded approximately 5 to 10 feet, and threaten the structural integrity of the towers. The towers are necessary for safe operation of the prison.

Effects to the Historic and Cultural Environment:

a. Archaeological Resources: The applicant states that no cultural resources were found within areas subject to jurisdiction by the USACE. If cultural resources listed or eligible for listing on the National Register of Historic Places are identified during construction activities, the USACE will coordinate with the State Historic Preservation Officer to take into account any project effects on such properties.

b. Historic Resources: The applicant states that the State Historic Preservation Officer has reviewed the project and has indicated that the project is not likely to have significant visual impacts on historic resources at the prison.

c. National Register Properties: Based on a review of records, inventories and previous studies, the project site is not known to contain any historical resources listed or eligible for listing on the National Register of Historic Places, the California Register of Historic Resources, or a local register or listing of historic resources. San Quentin State Prison is not listed as a whole nor are any of its individual buildings listed on any federal, state, or local historical register. The prison has never been formally evaluated as an historic resource; however, a 1995 architectural evaluation of the East Cell Block (completed in 1967) for proposed seismic upgrades concluded that the structure appeared to be eligible for listing on the National Register of Historic Places. Based on the findings of that evaluation, the entire prison may qualify for nomination to the National Register. Nevertheless, historical San Quentin State Prison structures, including the East Cell Block, stand above and away from the project site and would not be affected by the proposed project.

Summary of Cumulative Effects:

Cumulative impact is defined at 40 CFR 1508.7 as, in part, "the impact on the environment which results from the incremental impact of the action when added to other past, present, and reasonably foreseeable future actions."

Implementation of the project would contribute minimally to cumulative fill in San Francisco Bay in the amount of about 13,000 cubic yards. The wall has been located as close to the toe of the existing slope as is feasible in order to minimize the amount of fill into San Francisco Bay. No wetlands or special status species would be affected by the project, and no long-term water quality impacts would occur as a result of the project. Therefore, the project would not contribute to cumulative biological or water quality impacts in the Bay.

Conclusions and Recommendations:

Based on an analysis of the identified effects, a preliminary determination has been made that it will not be necessary to prepare an Environmental Impact Statement (EIS) for the subject permit application. The Environmental Assessment for the proposed action has, however, not yet been finalized and this preliminary determination may be reconsidered if additional information is developed.

5. Alternatives Analysis: Projects involving fill discharged into waters of the United States must comply

with the guidelines promulgated by the Administrator of the Environmental Protection Agency under Section 404(b) of the Clean Water Act (33 U.S.C. 1344(b)). An evaluation pursuant to the guidelines indicates the project is not dependent on location in, or proximity to waters of the United States to achieve the basic project purpose. This conclusion raises the (rebuttable) presumption that there is a practicable alternative to the project which would have less adverse effect to the aquatic ecosystem.

The applicant has submitted an analysis of alternatives for the project to facilitate a compliance determination of the guidelines. A range of on-site alternatives was considered.

6. Public Interest Evaluation: The decision whether to issue a permit will be based on an evaluation of the probable effects, including cumulative effects, of the proposed activity and its intended use on the public interest. Evaluation of the probable effects which the proposed activity may have on the public interest requires a careful weighing of all those factors that become relevant in each particular case. The benefits which reasonably may be expected to accrue from the proposal must be balanced against its reasonably foreseeable detriments. The decision whether to authorize a proposal, and the conditions under which it will be allowed to occur, are therefore determined by the outcome of the general balancing process. That decision will reflect the national concern for both protection and utilization of important resources. All factors which may be relevant to the proposal must be considered including the cumulative effects thereof. Those factors include conservation, economics, aesthetics, general environmental concerns, wetlands, cultural values, fish and wildlife values, flood hazards, floodplain values, land use, navigation, shore erosion and accretion, recreation, water supply and conservation, water quality, energy needs, safety, food and fiber production, mineral needs, considerations of property ownership, and, in general, the needs and welfare of the people.

7. Consideration of Comments: The USACE is soliciting comments from the public; Federal, State and local agencies and officials; Indian Tribes; and other interested parties in order to consider and evaluate the effects of this proposed activity. Any comments received will be considered by the USACE to determine whether to issue, modify, condition or deny a permit for this proposal. To make this decision, comments are used to assess effects on endangered species, historic properties, water quality, general environmental effects, and the other public interest factors listed above. To make this decision, comments are used to assess effect on endangered species, historic properties, water quality, and the other environmental factors which are addressed in a final Environmental Assessment and/or an Environmental Effect Statement pursuant to the National Environmental Policy Act. Comments are also used to determine the need for a public hearing and to determine the overall public interest of the proposed activity.

8. Submitting Comments: During the specified comment period, interested parties may submit written comments to the San Francisco District, Regulatory Branch, North Section, citing the applicant's name and public notice number in the letter. Comments may include a requestfor a public hearing on the project prior to a determination on the application; such requests shall state, with particularity, the reasons for holding a public hearing. All comments will be forwarded to the applicant for resolution or rebuttal. Details on any changes of a minor nature which are made in the final permit action will be provided on request. Other information may be obtained from the applicant of by contacting Mr. Brian Wirtz of our office at telephone 415-977-8438 or by email at Bwirtz@smtp.spd.usace.army.mil.

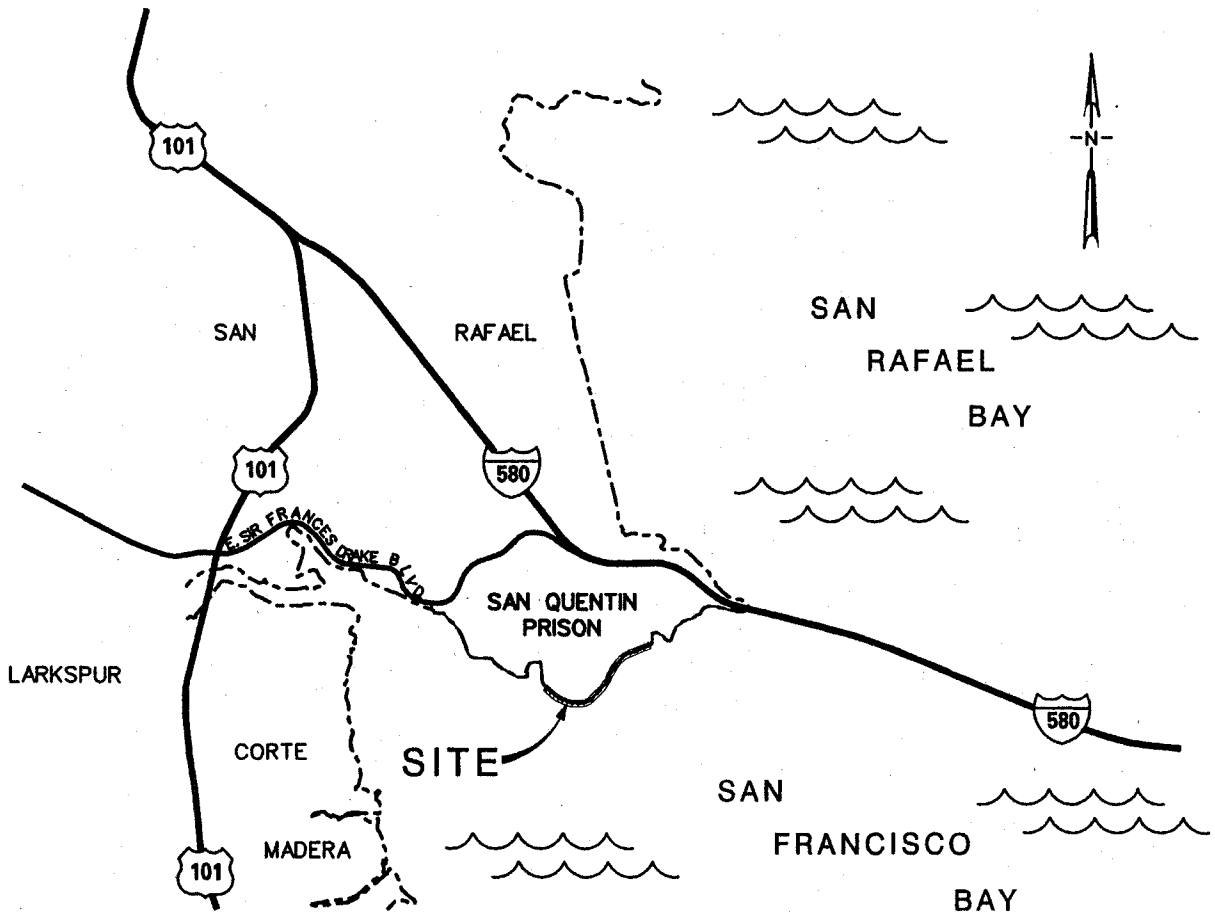

ANDERSON CONSULTING GROUP

PURPOSE:	SHORELINE RESTORATION AND SLOPE STABILIZATION	**VICINITY MAP**	**SAN QUENTIN SHORELINE REPAIRS PHASE II FINAL MEASURES**
SUBMITTED TO:	ARMY CORP OF ENGINEERS		IN: CORTE MADERA CHANNEL (SAN FRANCISCO BAY)
DATUM:	NGVD 29	SAN QUENTIN PRISON	AT: SAN QUENTIN PRISON
BENCHMARK:	BM 6 1936 EL=32.26 BM DISK LOCATED AT SAN QUENTIN POST OFFICE	STATE OF CALIFORNIA DEPT. OF CORRECTIONS SAN QUENTIN, CA 94964	MARIN COUNTY, CA
			SHEET 1 OF 16 SCALE: NONE DATE: 1/20/2000

CONSULTING KASL ENGINEERS

LEGEND

HTL	RECORD HIGH TIDE
HMW	MEAN HIGH TIDE
MLLW	MEAN LOW LOW TIDE
	PAVEMENT REPAIR
	RIP-RAP

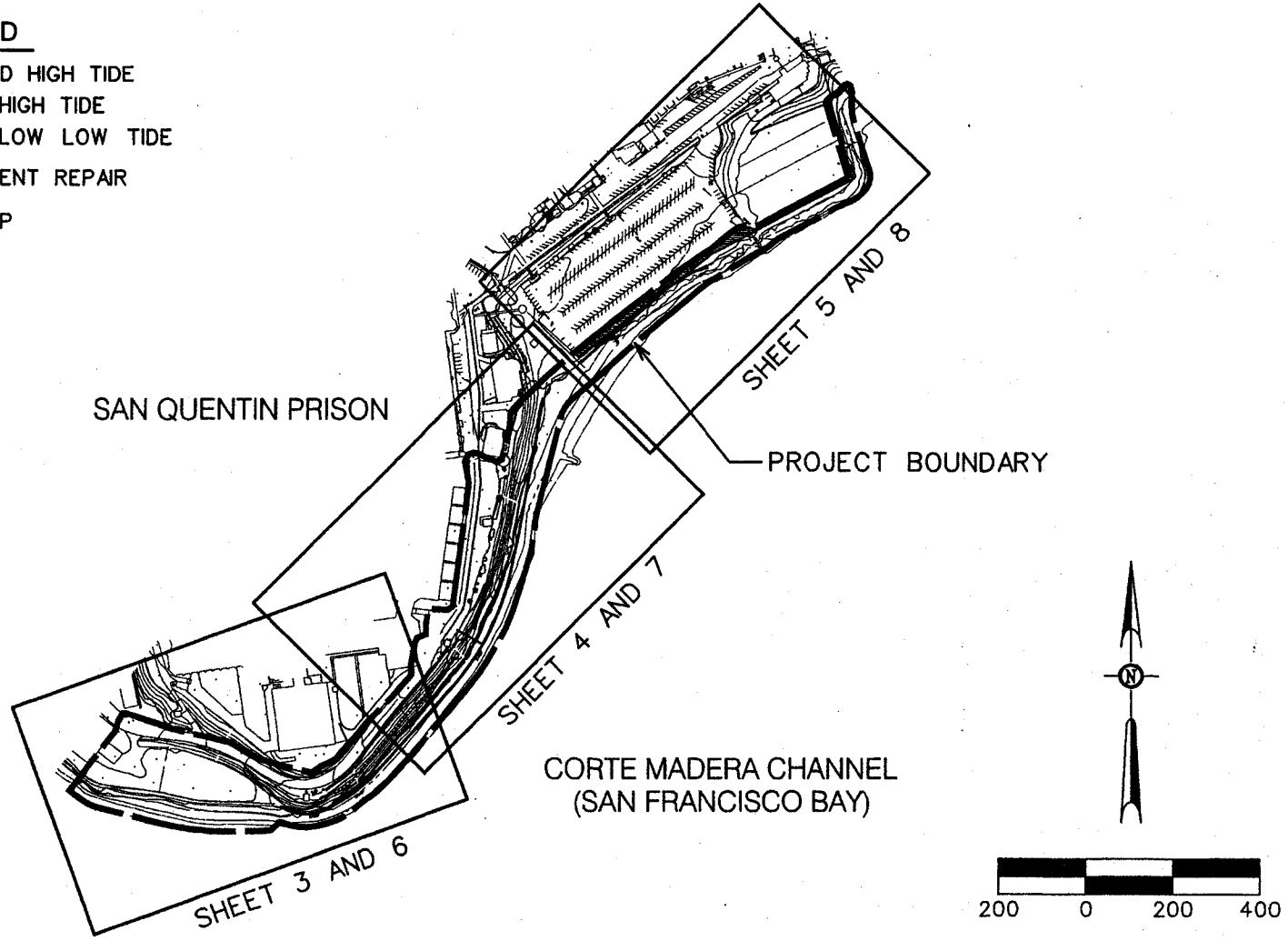

PURPOSE:	SHORELINE RESTORATION AND SLOPE STABILIZATION
SUBMITTED TO:	ARMY CORP OF ENGINEERS
DATUM:	NGVD 29
BENCHMARK:	BM 6 1936 EL=32.26 BM DISK LOCATED AT SAN QUENTIN POST OFFICE

SHEET INDEX

SAN QUENTIN PRISON
STATE OF CALIFORNIA
DEPT. OF CORRECTIONS
SAN QUENTIN, CA 94964

SAN QUENTIN SHORELINE REPAIRS
PHASE II FINAL MEASURES

IN: CORTE MADERA CHANNEL (SAN FRANCISCO BAY)
AT: SAN QUENTIN PRISON
MARIN COUNTY, CA

SHEET 2 OF 16 SCALE:1"=400' DATE: 1/20/2000

CONSULTING KASL ENGINEERS

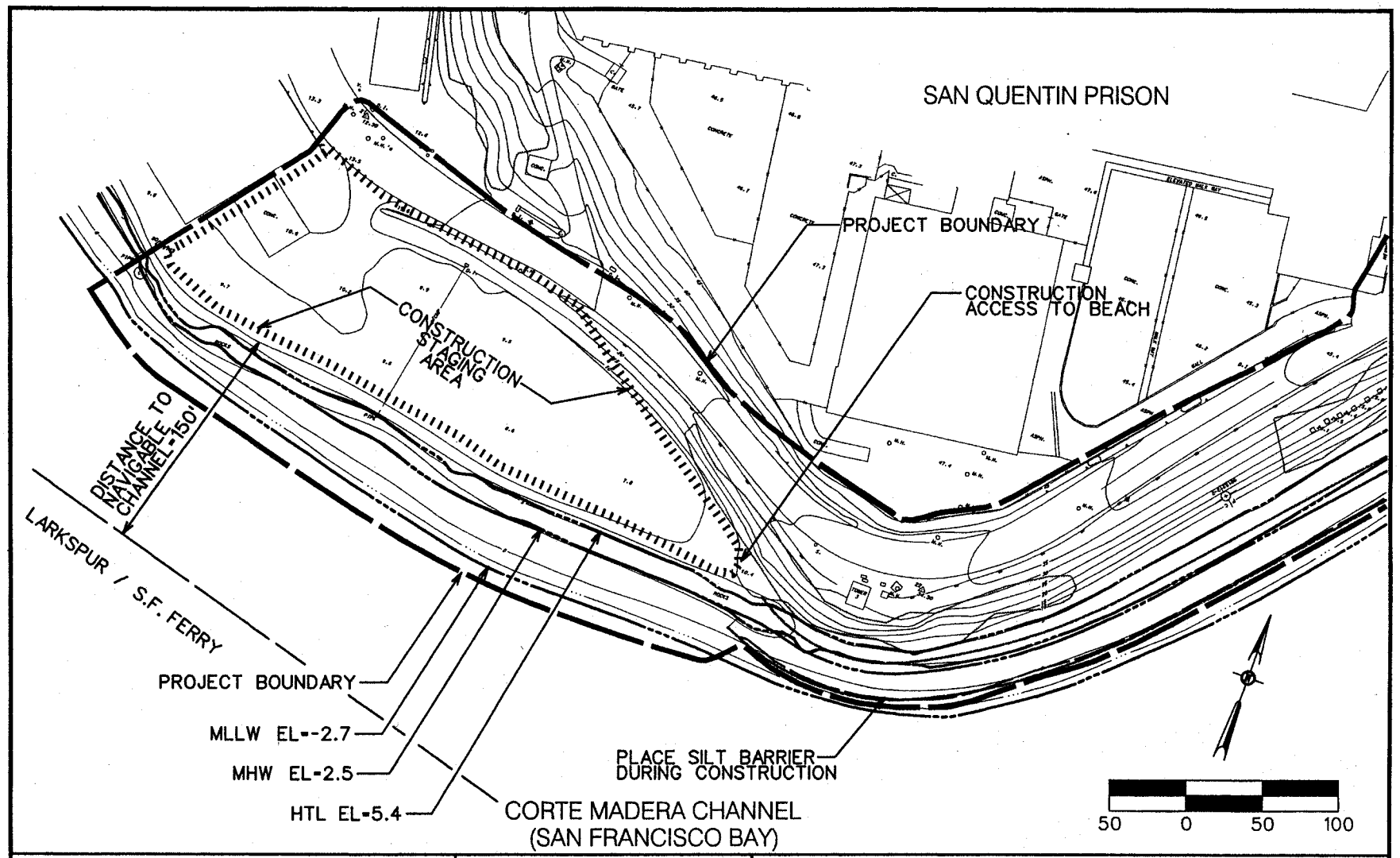

PURPOSE: SHORELINE RESTORATION AND SLOPE STABILIZATION SUBMITTED TO: ARMY CORP OF ENGINEERS DATUM: NGVD 29 BENCHMARK: BM 6 1936 EL=32.26 BM DISK LOCATED AT SAN QUENTIN POST OFFICE	**EXISTING CONDITIONS AND CONSTRUCTION STAGING** SAN QUENTIN PRISON STATE OF CALIFORNIA DEPT. OF CORRECTIONS SAN QUENTIN, CA 94964	**SAN QUENTIN SHORELINE REPAIRS PHASE II FINAL MEASURES** IN: CORTE MADERA CHANNEL (SAN FRANCISCO BAY) AT: SAN QUENTIN PRISON MARIN COUNTY, CA SHEET 3 OF 16 SCALE:1"=100' DATE: 1/20/2000 CONSULTING KASL ENGINEERS

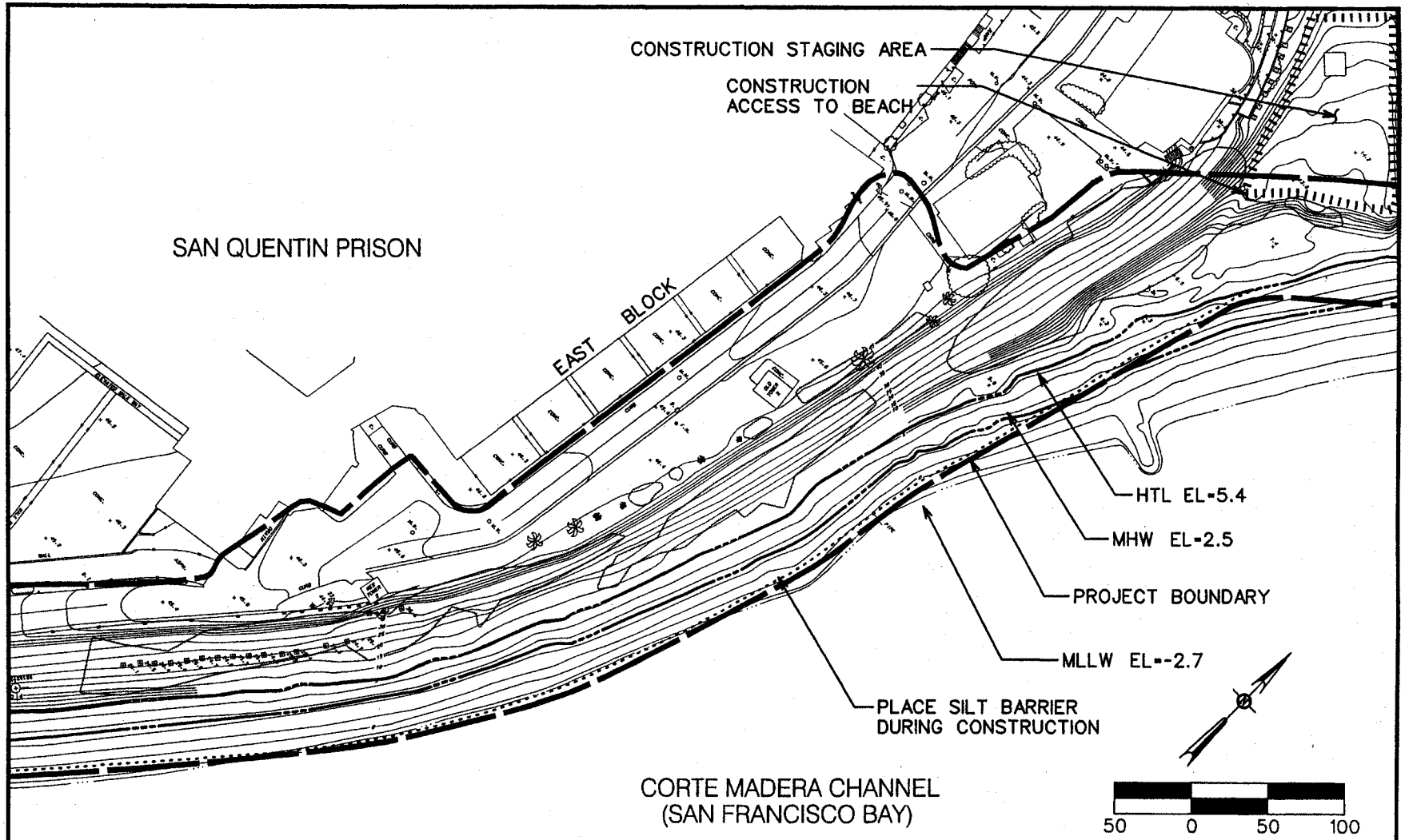

PURPOSE:	SHORELINE RESTORATION AND SLOPE STABILIZATION	**EXISTING CONDITIONS AND CONSTRUCTION STAGING**	**SAN QUENTIN SHORELINE REPAIRS PHASE II FINAL MEASURES**
SUBMITTED TO:	ARMY CORP OF ENGINEERS		IN: CORTE MADERA CHANNEL (SAN FRANCISCO BAY)
DATUM:	NGVD 29	SAN QUENTIN PRISON	AT: SAN QUENTIN PRISON
BENCHMARK:	BM 6 1936 EL=32.26 BM DISK LOCATED AT SAN QUENTIN POST OFFICE	STATE OF CALIFORNIA DEPT. OF CORRECTIONS SAN QUENTIN, CA 94964	MARIN COUNTY, CA
			SHEET 4 OF 16 SCALE:1"=100' DATE: 1/20/2000

CONSULTING KASL ENGINEERS

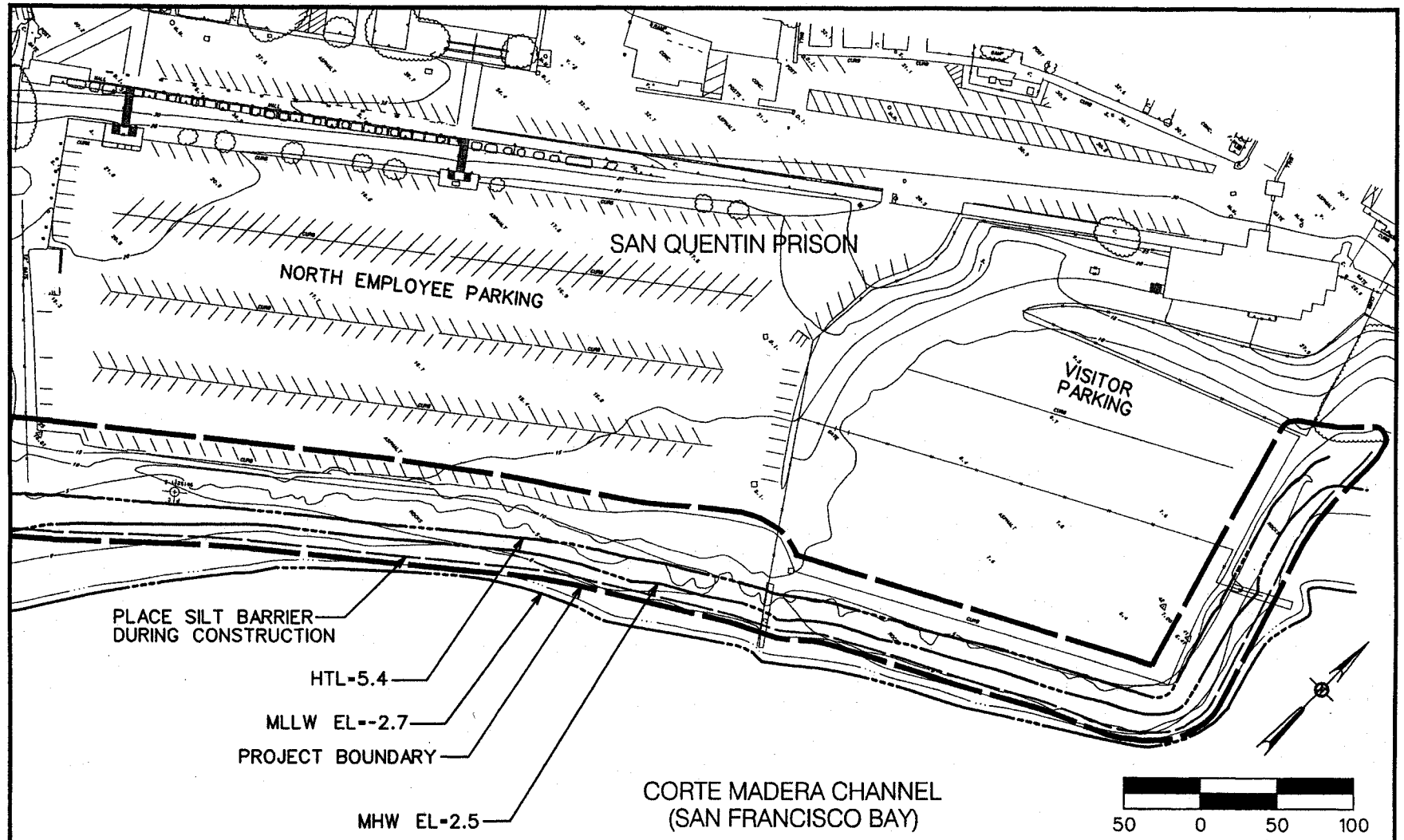

PURPOSE: SHORELINE RESTORATION AND SLOPE STABILIZATION SUBMITTED TO: ARMY CORP OF ENGINEERS DATUM: NGVD 29 BENCHMARK: BM 6 1936 EL=32.26 BM DISK LOCATED AT SAN QUENTIN POST OFFICE	**EXISTING CONDITIONS AND CONSTRUCTION STAGING** SAN QUENTIN PRISON STATE OF CALIFORNIA DEPT. OF CORRECTIONS SAN QUENTIN, CA 94964	**SAN QUENTIN SHORELINE REPAIRS PHASE II FINAL MEASURES** IN: CORTE MADERA CHANNEL (SAN FRANCISCO BAY) AT: SAN QUENTIN PRISON MARIN COUNTY, CA SHEET 5 OF 16 SCALE:1"=100' DATE: 1/20/2000

CONSULTING KASL ENGINEERS

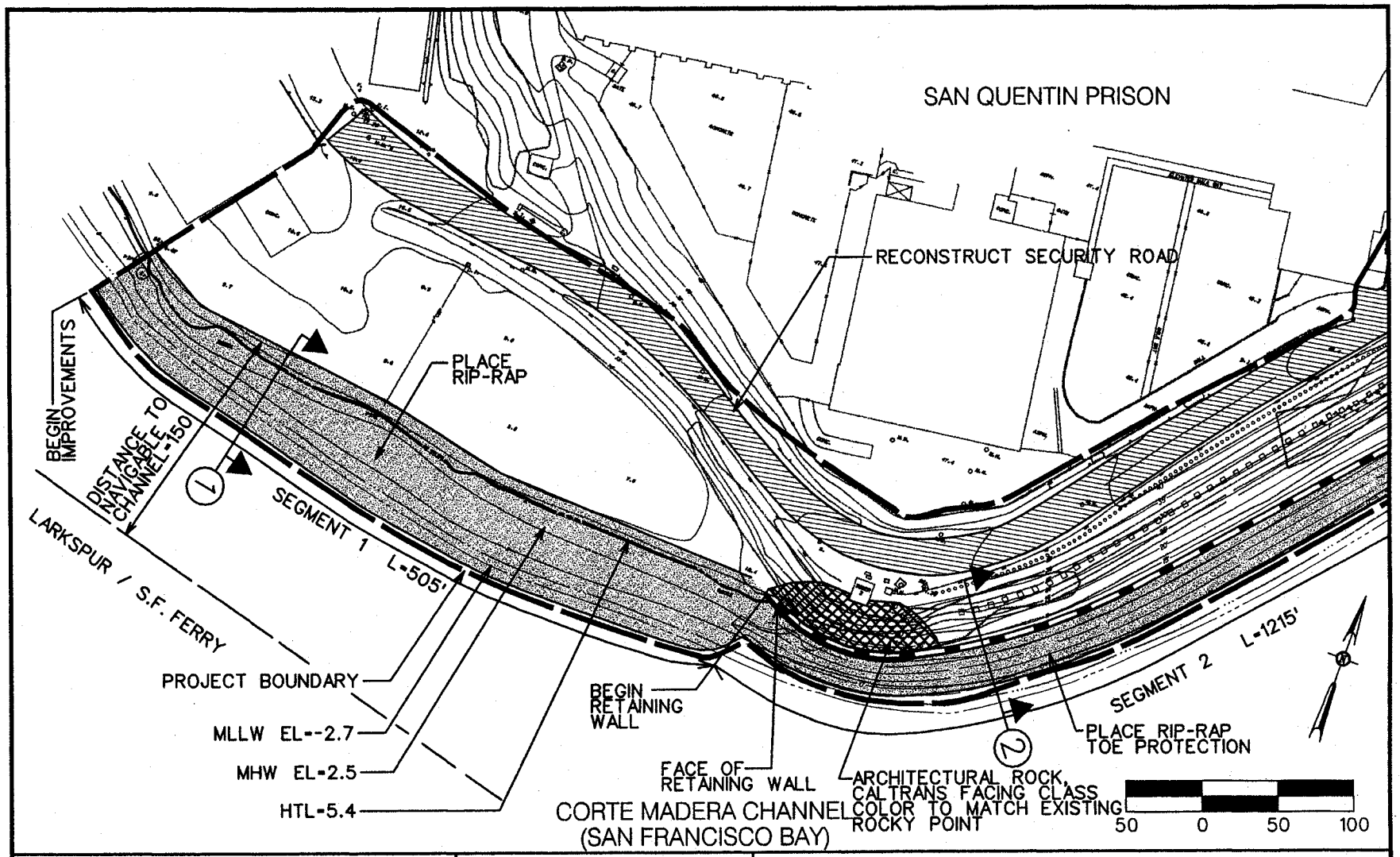

PURPOSE: SHORELINE RESTORATION AND SLOPE STABILIZATION SUBMITTED TO: ARMY CORP OF ENGINEERS DATUM: NGVD 29 BENCHMARK: BM 6 1936 EL=32.26 BM DISK LOCATED AT SAN QUENTIN POST OFFICE	**PROPOSED IMPROVEMENTS** SAN QUENTIN PRISON STATE OF CALIFORNIA DEPT. OF CORRECTIONS SAN QUENTIN, CA 94964	**SAN QUENTIN SHORELINE REPAIRS** **PHASE II FINAL MEASURES** IN: CORTE MADERA CHANNEL (SAN FRANCISCO BAY) AT: SAN QUENTIN PRISON MARIN COUNTY, CA SHEET 6 OF 16 SCALE:1"=100' DATE: 1/20/2000 CONSULTING KASL ENGINEERS

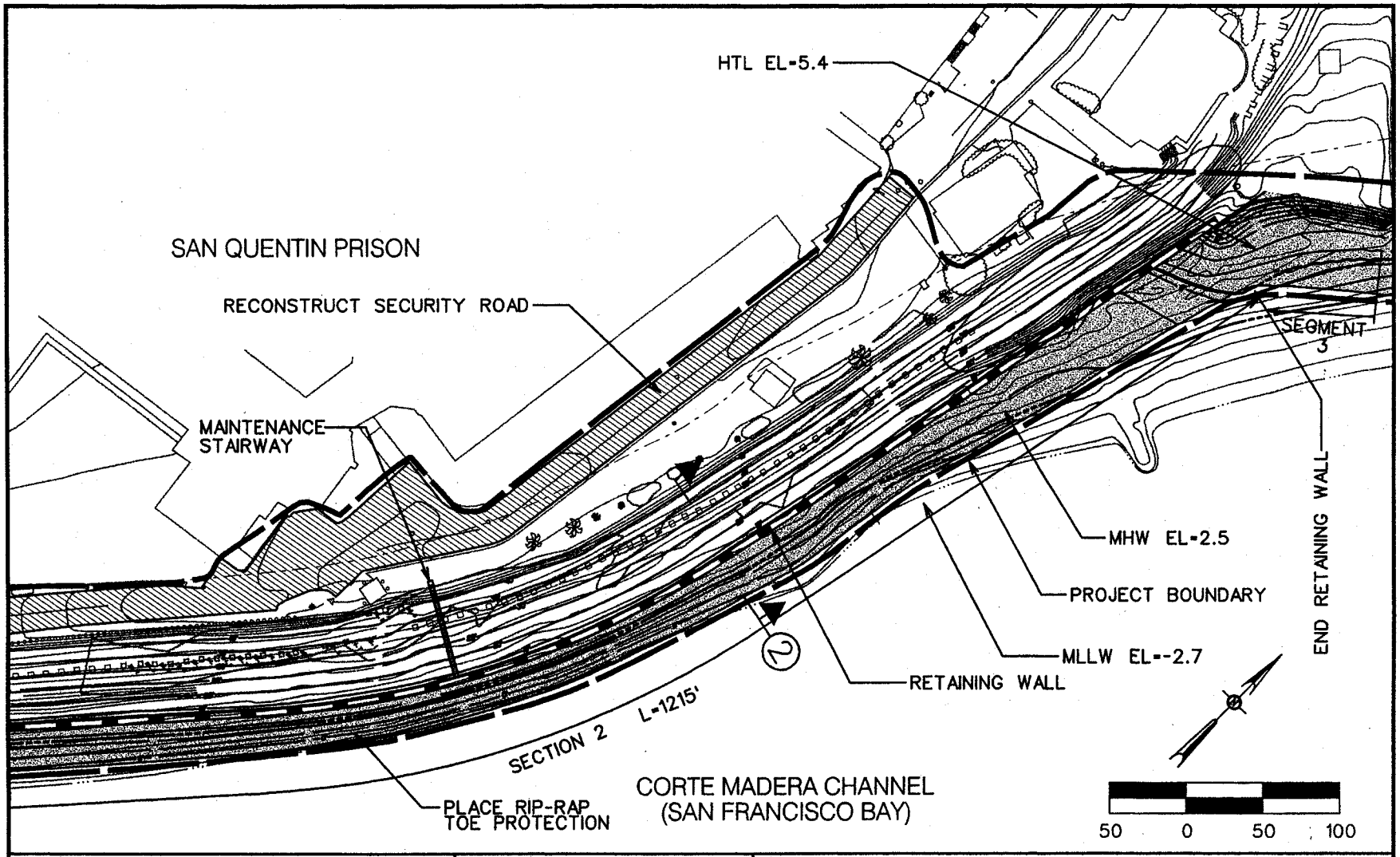

PURPOSE:	SHORELINE RESTORATION AND SLOPE STABILIZATION	**PROPOSED IMPROVEMENTS**	**SAN QUENTIN SHORELINE REPAIRS PHASE II FINAL MEASURES**
SUBMITTED TO:	ARMY CORP OF ENGINEERS	SAN QUENTIN PRISON STATE OF CALIFORNIA DEPT. OF CORRECTIONS SAN QUENTIN, CA 94964	IN: CORTE MADERA CHANNEL (SAN FRANCISCO BAY) AT: SAN QUENTIN PRISON MARIN COUNTY, CA
DATUM:	NGVD 29		
BENCHMARK:	BM 6 1936 EL=32.26 BM DISK LOCATED AT SAN QUENTIN POST OFFICE		SHEET 7 OF 16 SCALE:1"=100' DATE: 1/20/2000

CONSULTING KASL ENGINEERS

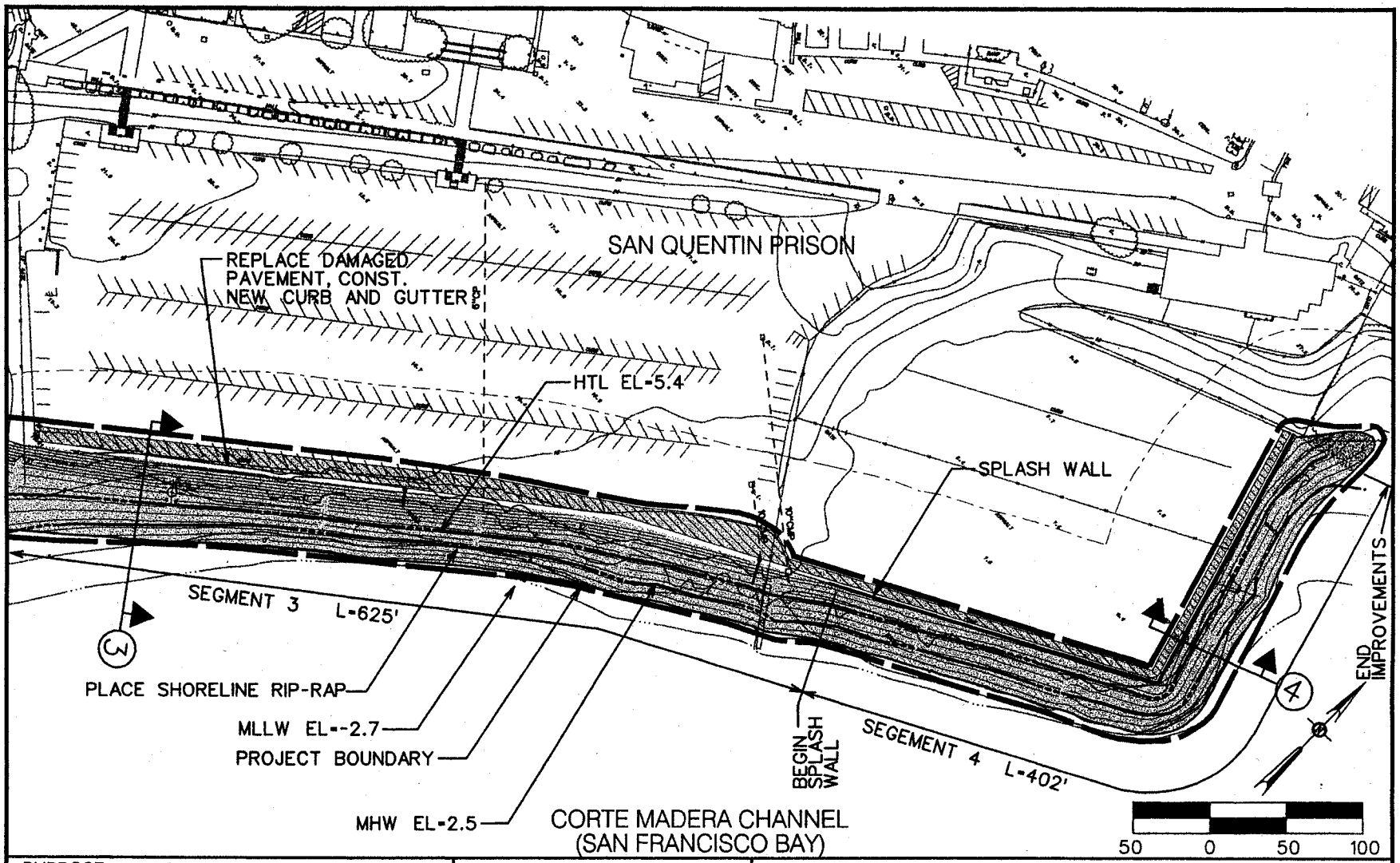

PURPOSE:	SHORELINE RESTORATION AND SLOPE STABILIZATION	**PROPOSED IMPROVEMENTS**	**SAN QUENTIN SHORELINE REPAIRS PHASE II FINAL MEASURES**
SUBMITTED TO:	ARMY CORP OF ENGINEERS	SAN QUENTIN PRISON STATE OF CALIFORNIA DEPT. OF CORRECTIONS SAN QUENTIN, CA 94964	IN: CORTE MADERA CHANNEL (SAN FRANCISCO BAY) AT: SAN QUENTIN PRISON MARIN COUNTY, CA
DATUM:	NGVD 29		
BENCHMARK:	BM 6 1936 EL=32.26 BM DISK LOCATED AT SAN QUENTIN POST OFFICE		SHEET 8 OF 16 SCALE:1"=100' DATE: 1/20/2000

CONSULTING KASL ENGINEERS

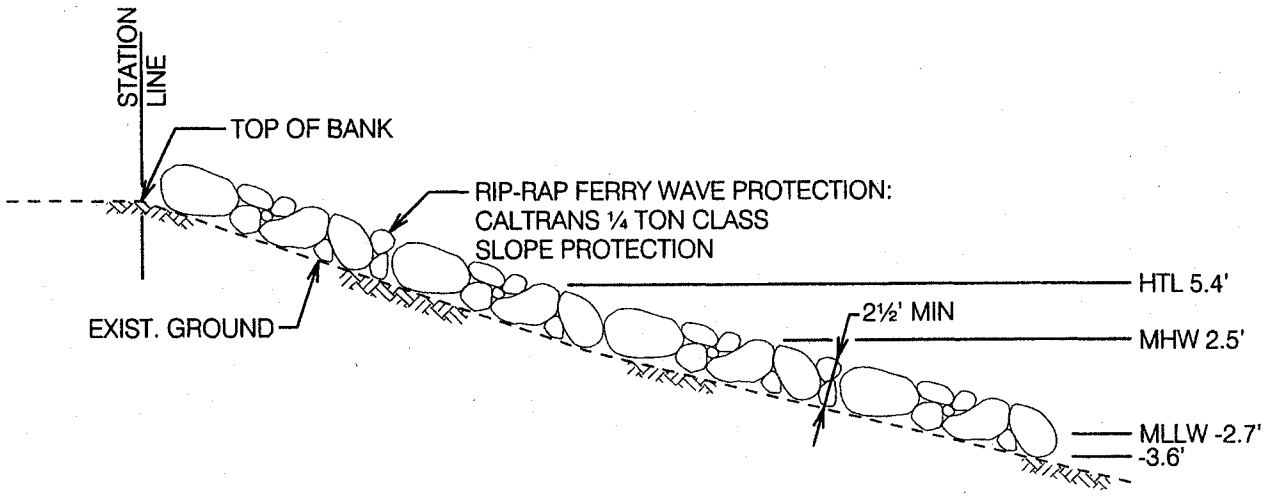

SECTION 1

PURPOSE:	SHORELINE RESTORATION AND SLOPE STABILIZATION	**SECTION 1 - SLOPE PROTECTION**	**SAN QUENTIN SHORELINE REPAIRS PHASE II FINAL MEASURES**
SUBMITTED TO:	ARMY CORP OF ENGINEERS		IN: CORTE MADERA CHANNEL (SAN FRANCISCO BAY)
DATUM:	NGVD 29	SAN QUENTIN PRISON	AT: SAN QUENTIN PRISON
BENCHMARK:	BM 6 1936 EL=32.26 BM DISK LOCATED AT SAN QUENTIN POST OFFICE	STATE OF CALIFORNIA DEPT. OF CORRECTIONS SAN QUENTIN, CA 94964	MARIN COUNTY, CA
			SHEET 9 OF 16 SCALE:1"=10' DATE: 1/20/2000

CONSULTING KASL ENGINEERS

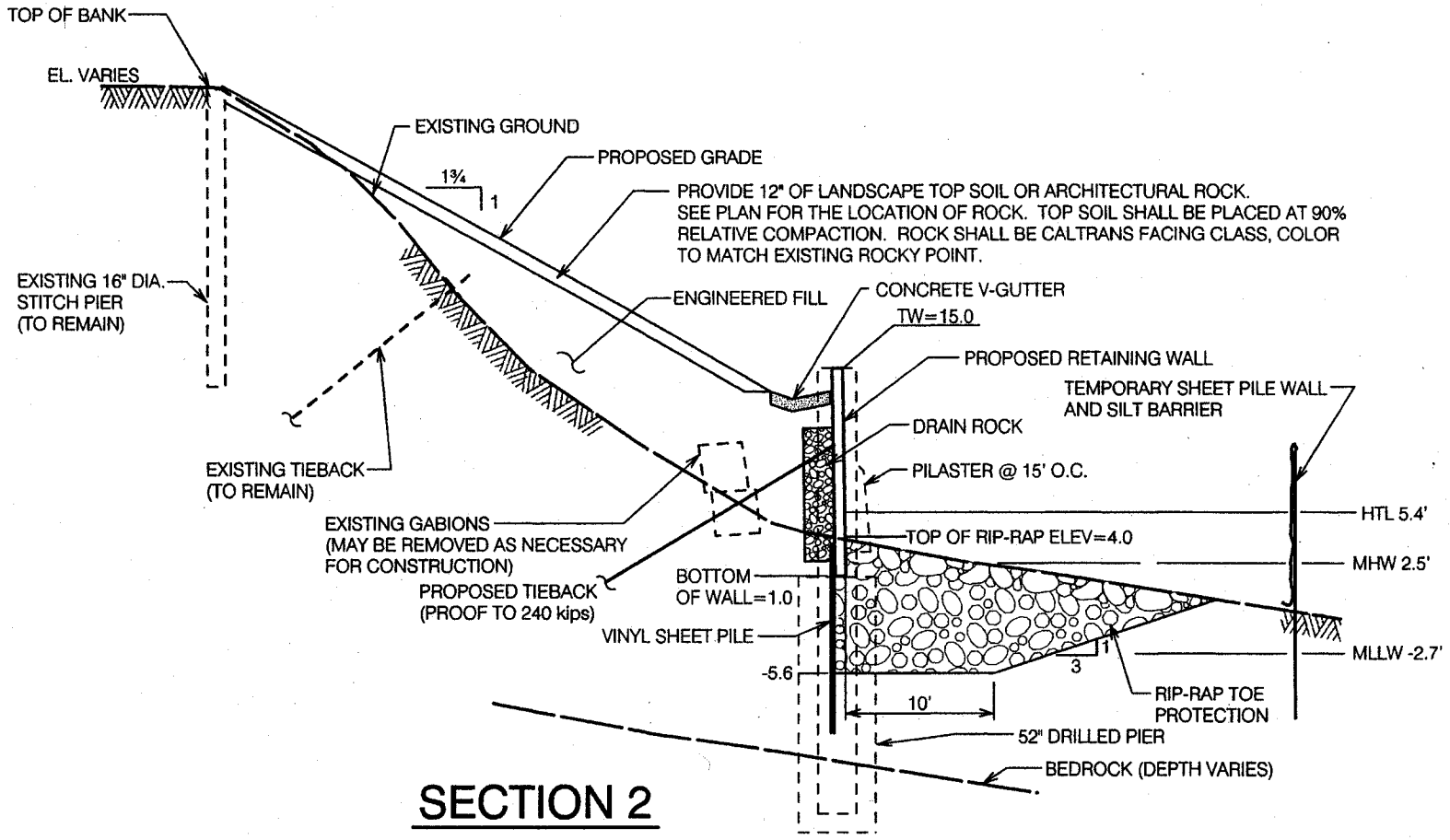

SECTION 2

PURPOSE:	SHORELINE RESTORATION AND SLOPE STABILIZATION	**SECTION 2 - RETAINING WALL**	**SAN QUENTIN SHORELINE REPAIRS PHASE II FINAL MEASURES**
SUBMITTED TO:	ARMY CORP OF ENGINEERS		IN: CORTE MADERA CHANNEL (SAN FRANCISCO BAY)
DATUM:	NGVD 29	SAN QUENTIN PRISON	AT: SAN QUENTIN PRISON
BENCHMARK:	BM 6 1936 EL=32.26 BM DISK LOCATED AT SAN QUENTIN POST OFFICE	STATE OF CALIFORNIA DEPT. OF CORRECTIONS SAN QUENTIN, CA 94964	MARIN COUNTY, CA
			SHEET 10 OF 16 NOT TO SCALE DATE: 1/20/2000

CONSULTING KASL ENGINEERS

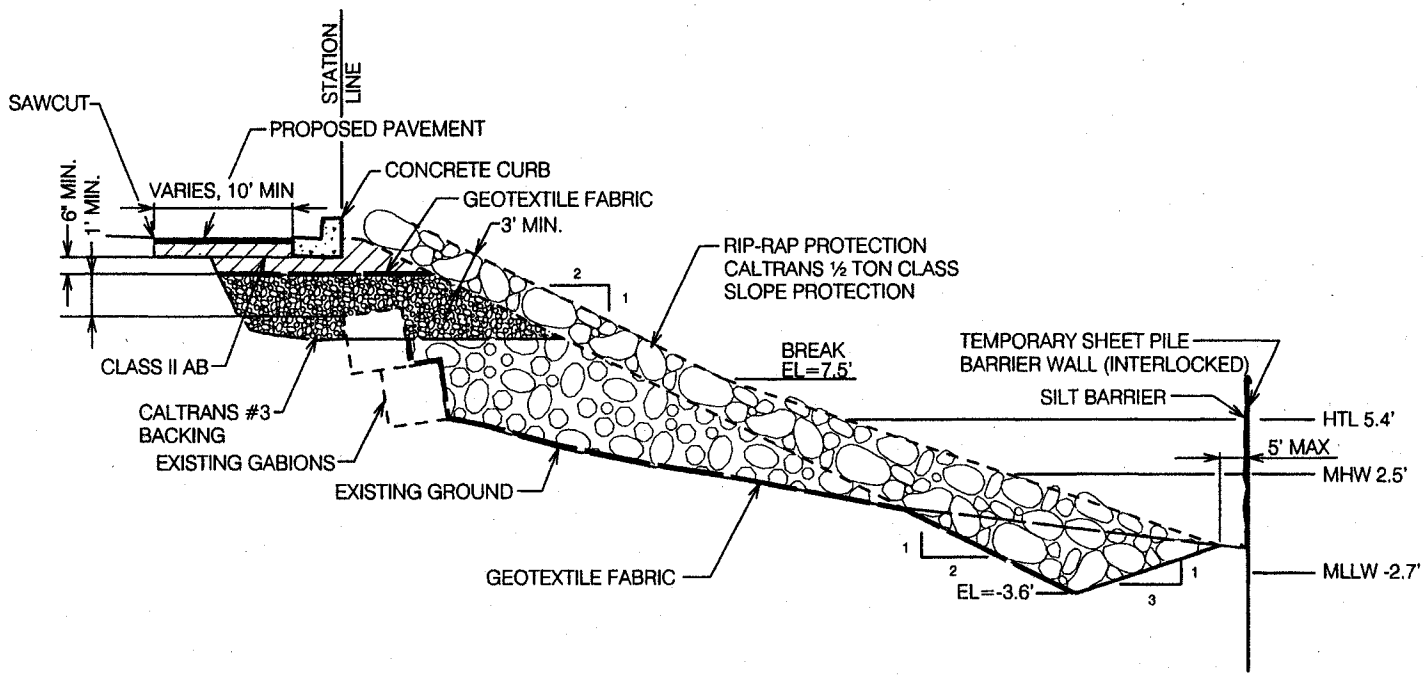

SECTION 3

PURPOSE:	SHORELINE RESTORATION AND SLOPE STABILIZATION	**SECTION 3 - PARKING AREA**	**SAN QUENTIN SHORELINE REPAIRS PHASE II FINAL MEASURES**
SUBMITTED TO:	ARMY CORP OF ENGINEERS		IN: CORTE MADERA CHANNEL (SAN FRANCISCO BAY)
DATUM:	NGVD 29	SAN QUENTIN PRISON STATE OF CALIFORNIA DEPT. OF CORRECTIONS SAN QUENTIN, CA 94964	AT: SAN QUENTIN PRISON MARIN COUNTY, CA
BENCHMARK:	BM 6 1936 EL=32.26 BM DISK LOCATED AT SAN QUENTIN POST OFFICE		SHEET 11 OF 16 SCALE:1"=10' DATE: 1/20/2000

CONSULTING KASL ENGINEERS

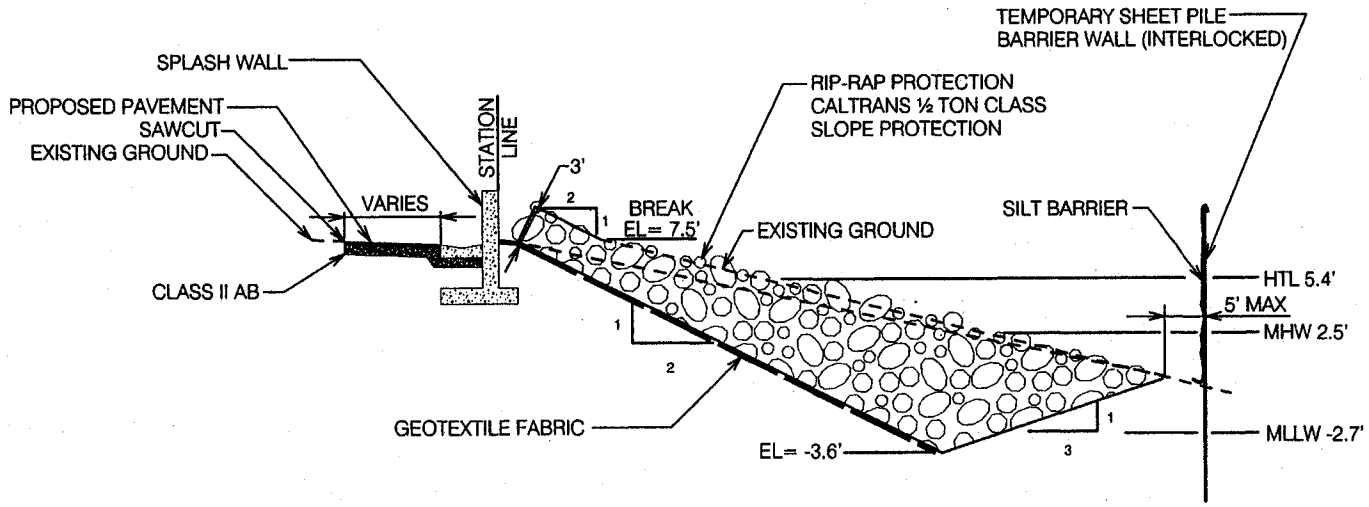

SECTION 4

SCALE: 1"=10'

PURPOSE:	SHORELINE RESTORATION AND SLOPE STABILIZATION	**SECTION 4 - SPLASH WALL**	**SAN QUENTIN SHORELINE REPAIRS PHASE II FINAL MEASURES**
SUBMITTED TO:	ARMY CORP OF ENGINEERS	SAN QUENTIN PRISON STATE OF CALIFORNIA DEPT. OF CORRECTIONS SAN QUENTIN, CA 94964	IN: CORTE MADERA CHANNEL (SAN FRANCISCO BAY) AT: SAN QUENTIN PRISON MARIN COUNTY, CA
DATUM:	NGVD 29		
BENCHMARK:	BM 6 1936 EL=32.26 BM DISK LOCATED AT SAN QUENTIN POST OFFICE		SHEET 12 OF 16 SCALE:1"=10' DATE: 1/20/2000

CONSULTING KASL ENGINEERS

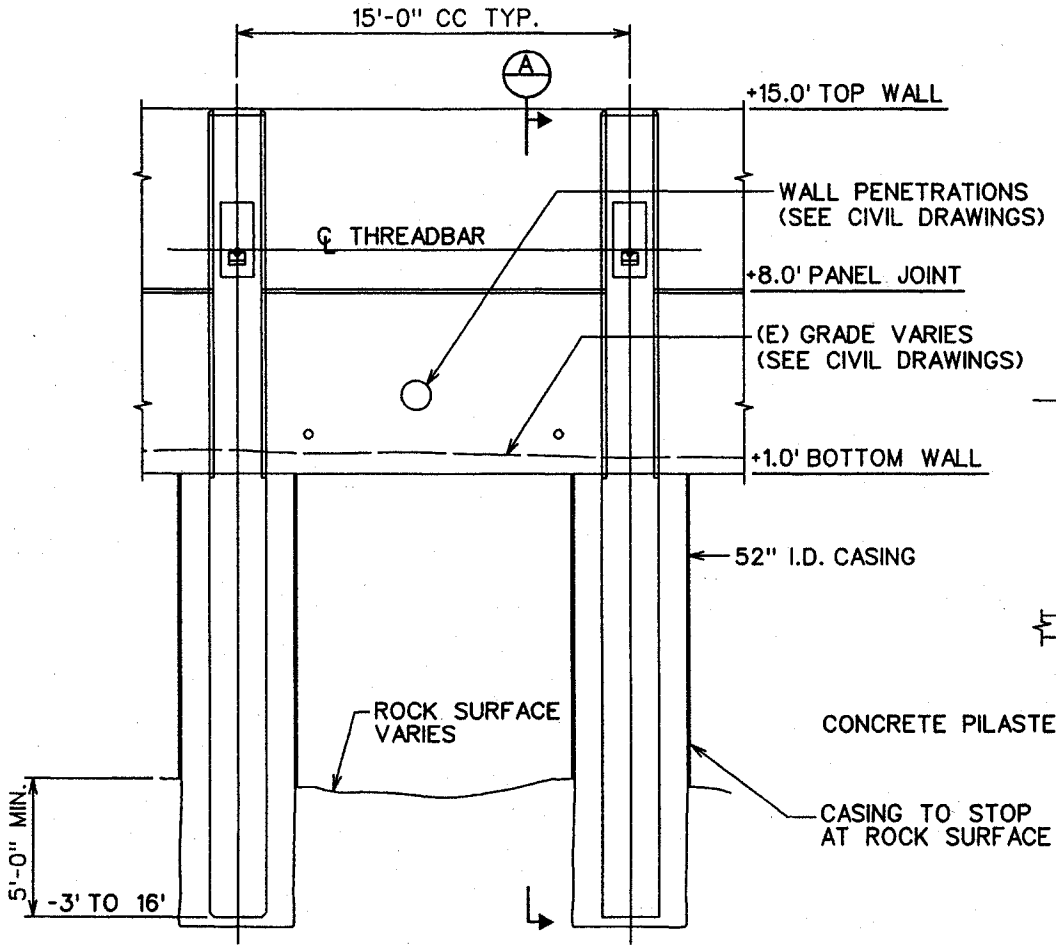

ELEVATION

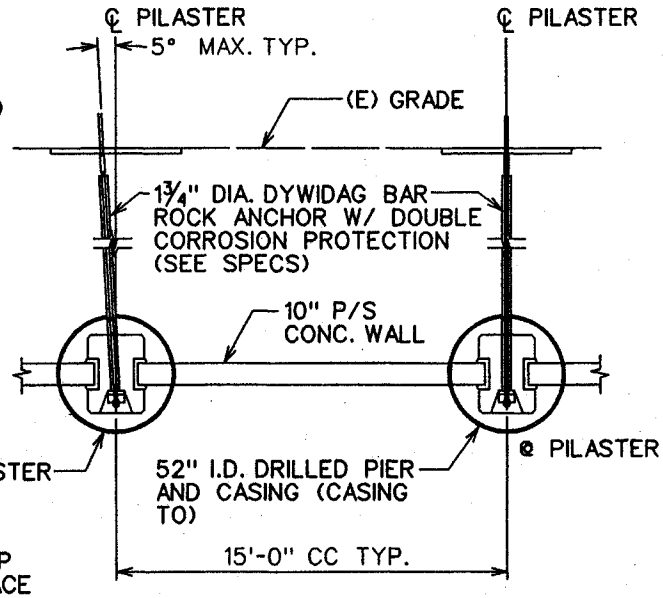

PLAN

VE SOLUTIONS
3350 Monier Circle, Suite 5
Rancho Cordova, CA 95742
(916) 852-6064

PURPOSE: SHORELINE RESTORATION AND SLOPE STABILIZATION SUBMITTED TO: ARMY CORP OF ENGINEERS DATUM: NGVD 29 BENCHMARK: BM 6 1936 EL=32.26 BM DISK LOCATED AT SAN QUENTIN POST OFFICE	**STRUCTURAL DETAILS** SAN QUENTIN PRISON STATE OF CALIFORNIA DEPT. OF CORRECTIONS SAN QUENTIN, CA 94964	**SAN QUENTIN SHORELINE REPAIRS** **PHASE II FINAL MEASURES** IN: CORTE MADERA CHANNEL (SAN FRANCISCO BAY) AT: SAN QUENTIN PRISON MARIN COUNTY, CA SHEET 13 OF 16 NO SCALE DATE: 1/20/2000

CONSULTING KASL ENGINEERS