Printed from TOPO! ©1997 Wildflower Productions (www.topo.com)

APPLICANT:	PURPOSE:	ADJ. PROP. OWNER:	KIEWIT PACIFIC
KIEWIT PACIFIC CO. P.O. BOX 1769 VANCOUVER WA 98668	DREDGING FOR PIER CONSTRUCTION & VESSEL DOCKING	CITY OF VALLEJO IN MARE ISLAND STRAIT	VALLEJO YARD, SOLANO CO., CA VICINITY MAP SHEET 1 OF 5 12/16/99

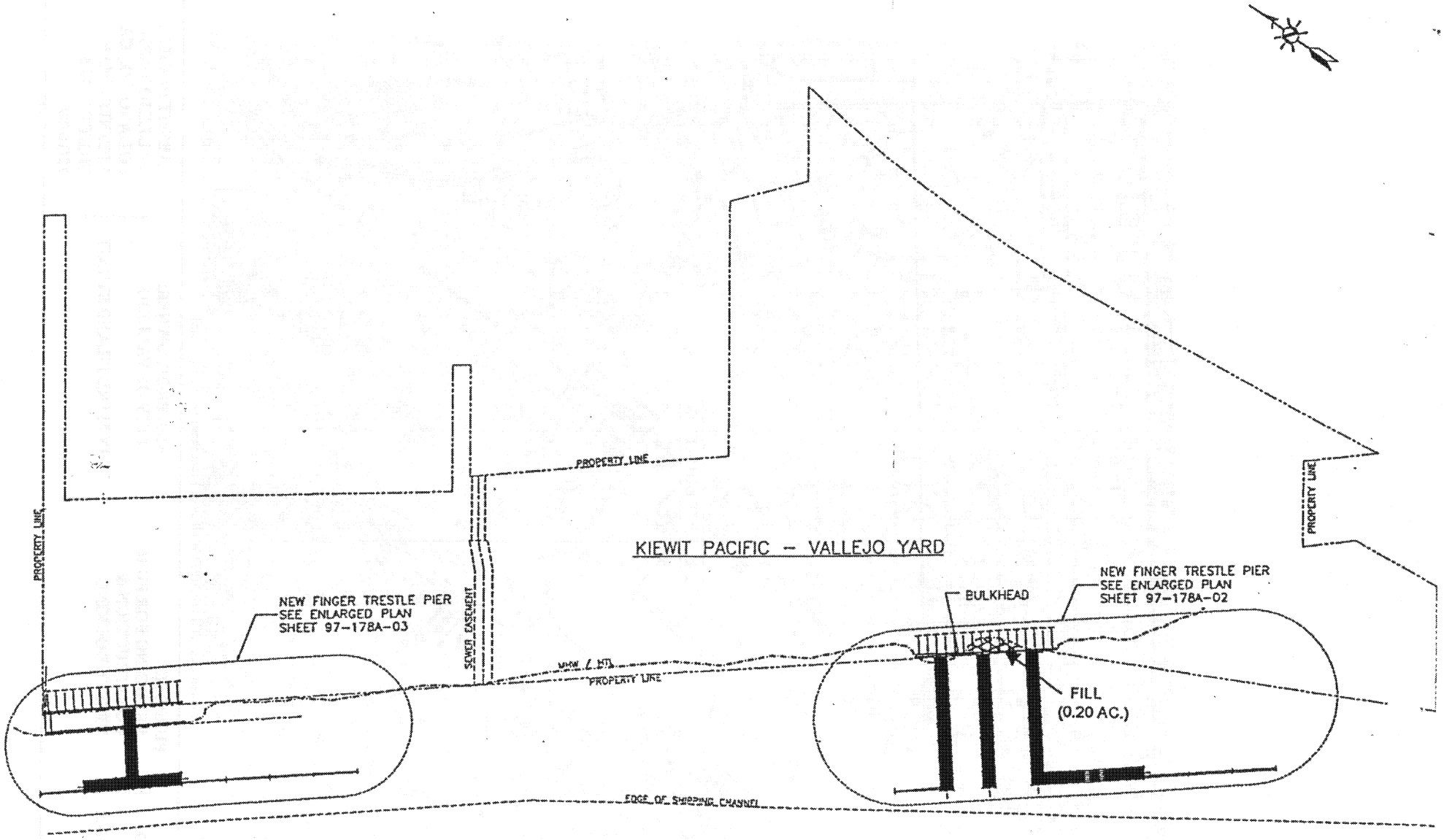

OVERALL SITE PLAN – PHASE 2

SCALE: 1/4" = 100'-0"

APPLICANT:	PURPOSE:	ADJ. PROP. OWNER:
KIEWIT PACIFIC CO. P.O. BOX 1769 VANCOUVER WA 98668	DREDGING FOR PIER CONSTRUCTION & VESSEL DOCKING	CITY OF VALLEJO IN MARE ISLAND STRAIT SOLANO CO., CA

SMM & MONROE & GRAT ENGINEERS, INC.
PARK PLAZA WEST, SUITE 210
10700 S.W. BEAVERTON HWY.
BEAVERTON, OREGON 97005
PHONE: (503) 643-5098
FAX: (503) 643-8610

KIEWIT PACIFIC
VALLEJO YARD
OVERALL SITE PLAN
PHASE 2

SHEET 2 OF 5

DRAWN BY	DATE	CHKD BY	DATE	SCALE	DWG. NO.	REV.
D. KEARL	4/3/97			AS NOTED	97-178A-01	

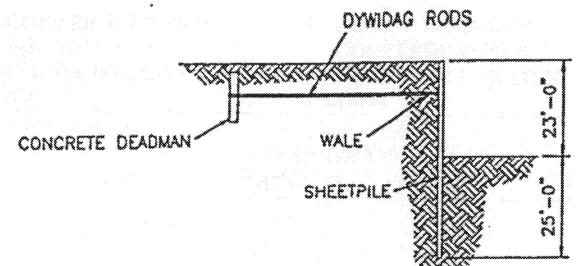

A/02 SECTION
1" = 48'

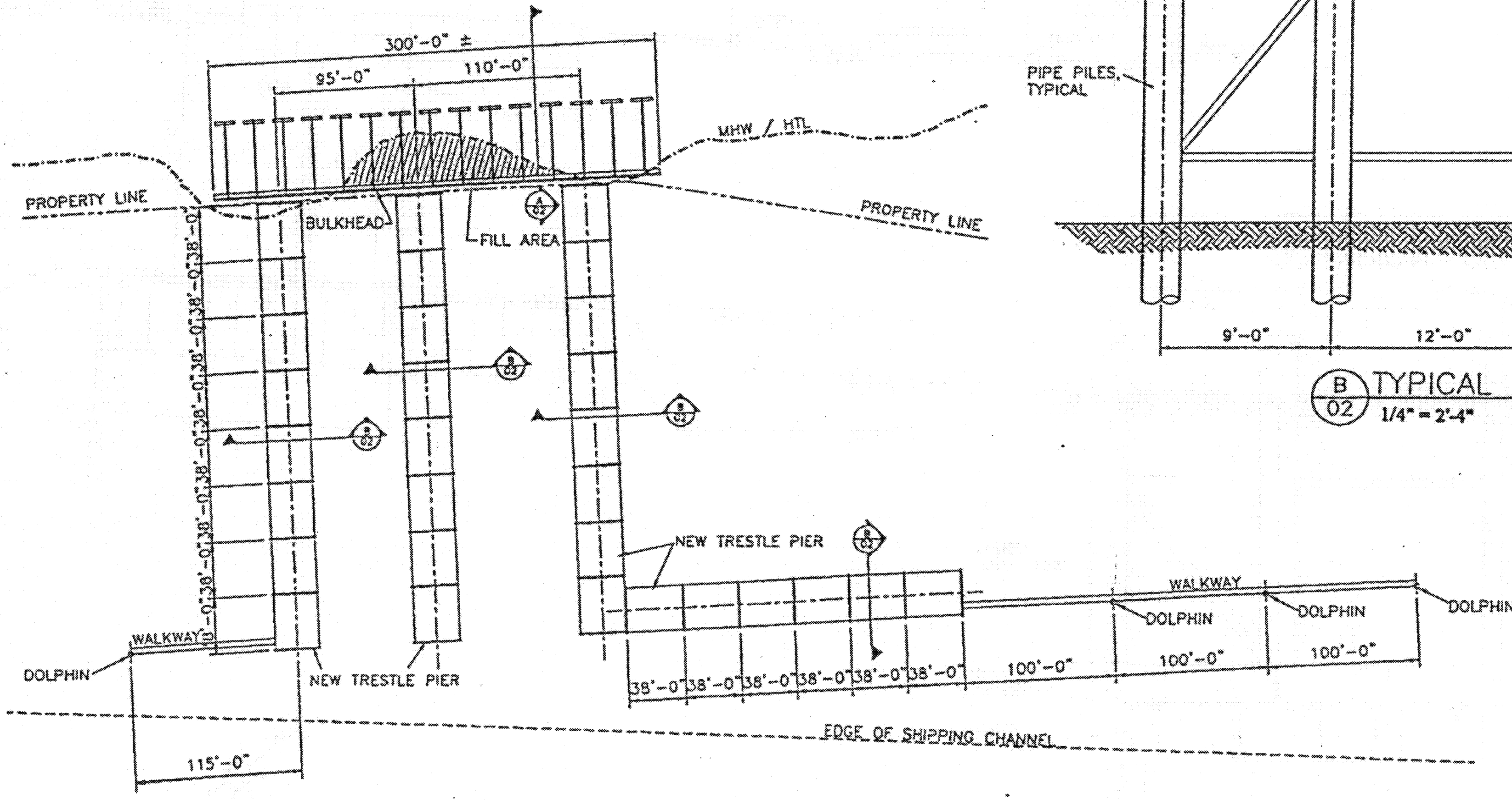

SOUTH TRESTLE PIER ENLARGED PLAN
SCALE: 1" = 120'

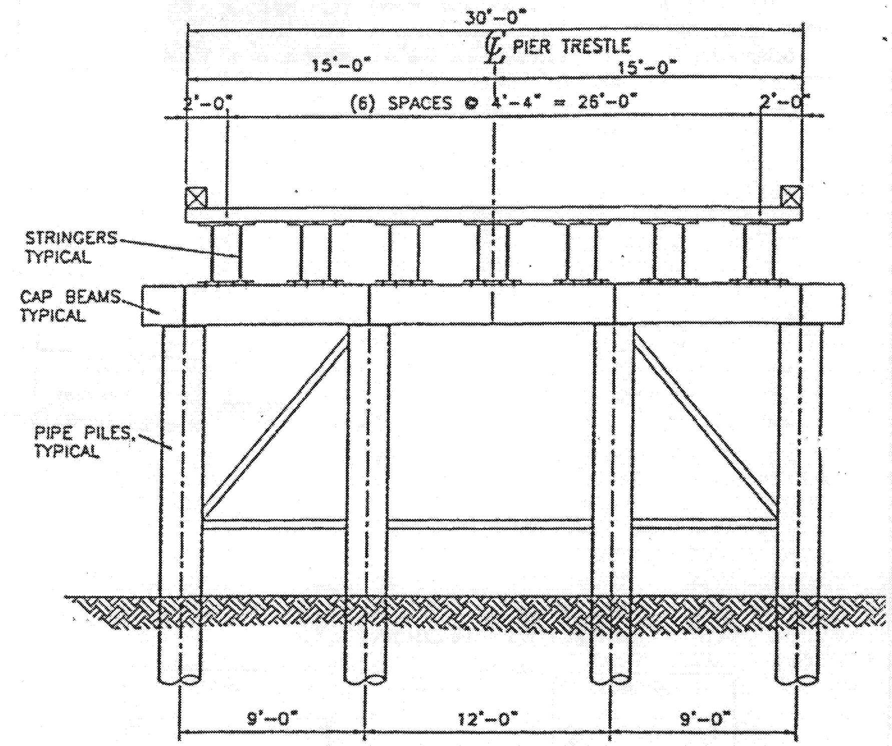

B/02 TYPICAL SECTION
1/4" = 2'-4"

APPLICANT:	PURPOSE:	ADJ. PROP. OWNER:
KIEWIT PACIFIC CO. P.O. BOX 1769 VANCOUVER WA 98668	DREDGING FOR PIER CONSTRUCTION & VESSEL DOCKING	CITY OF VALLEJO IN MARE ISLAND STRAIT SOLANO CO., CA

SMITH & MONROE & GRAY ENGINEERS, INC.
PARK PLAZA WEST, SUITE 310
10700 S.W. BEAVERTON HWY.
BEAVERTON, OREGON 97005
PHONE: (503) 643-9595
FAX: (503) 643-0610

KIEWIT PACIFIC
VALLEJO YARD
PHASE 2 ENLARGED TRESTLE PLANS
SHEET 3 OF 5

DRAWN BY	DATE	CHECKED BY	DATE	SCALE	DWG. NO.
D. KEANE	9/8/97			AS NOTED	97-178A-02

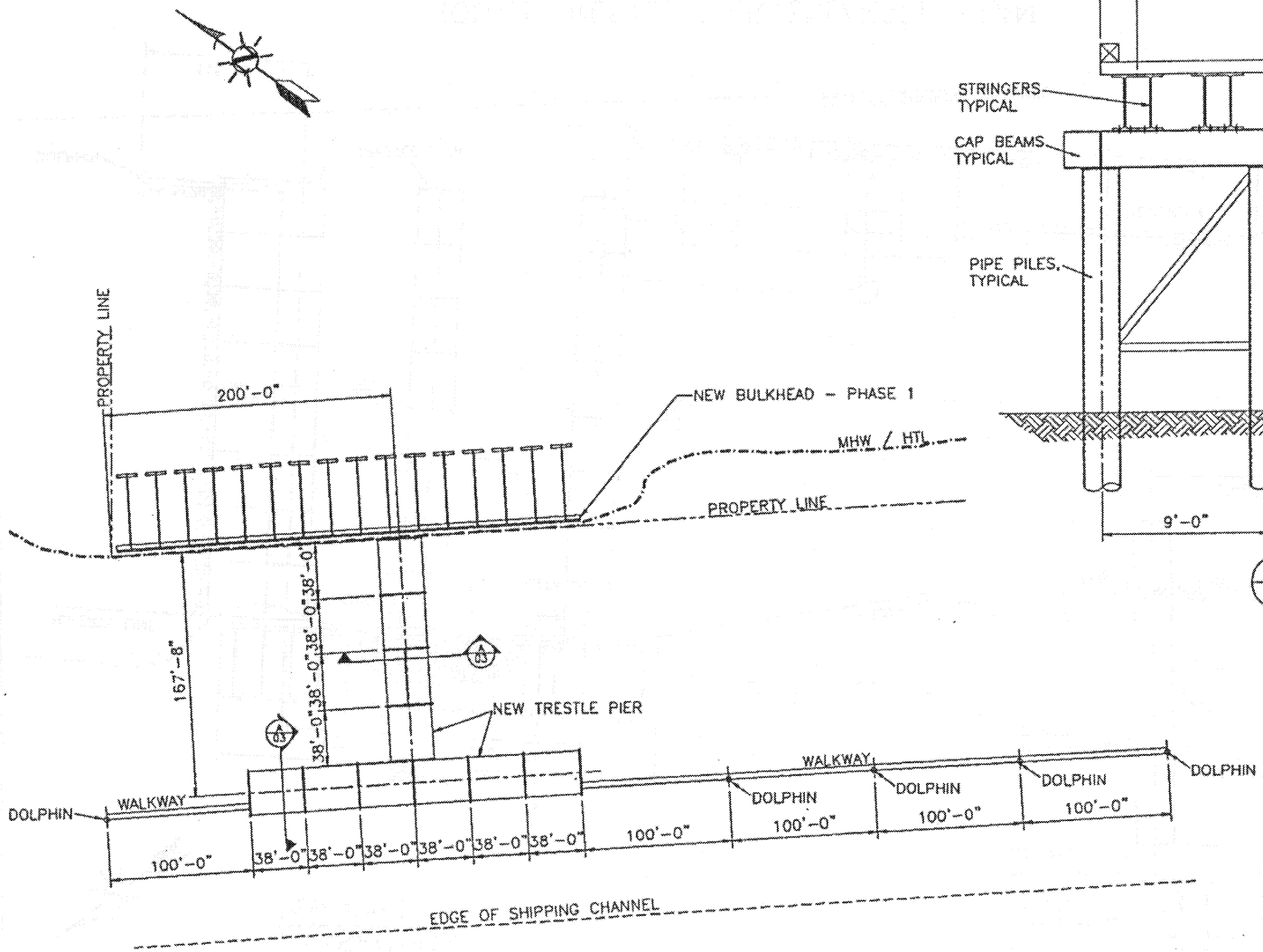

NORTH TRESTLE PIER ENLARGED PLAN

SCALE: 1" = 120'

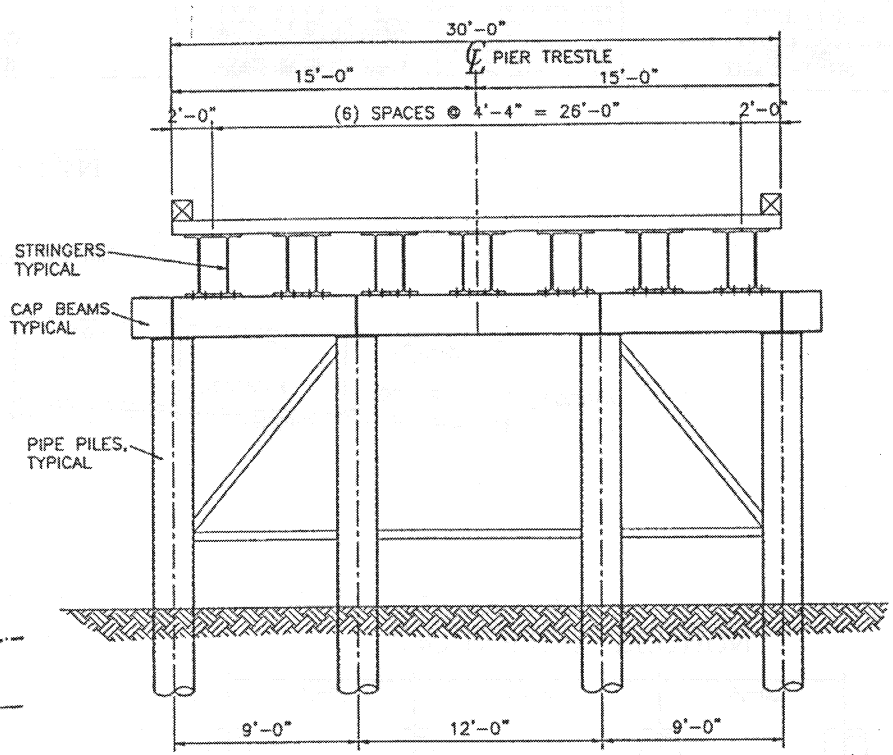

A/03 TYPICAL SECTION

1/4" = 2'-4"

APPLICANT:	PURPOSE:	ADJ. PROP. OWNER:
KIEWIT PACIFIC CO. P.O. BOX 1769 VANCOUVER WA 98668	DREDGING FOR PIER CONSTRUCTION & VESSEL DOCKING	CITY OF VALLEJO IN MARE ISLAND STRAIT SOLANO CO., CA

SMITH & MONROE & GRAY ENGINEERS, INC.
PARK PLAZA WEST, SUITE 210
10700 S.W. BEAVERTON HWY.
BEAVERTON, OREGON 97005
PHONE: (503) 643-5593
FAX: (503) 643-8610

DRAWN BY	DATE	CHKD BY	DATE	SCALE	DWG. NO.	REV.
D. KEARL	9/8/97			AS NOTED	97-178A-03	

KIEWIT PACIFIC
VALLEJO YARD
PHASE 2 ENLARGED TRESTLE PLANS

SHEET 4 OF 5

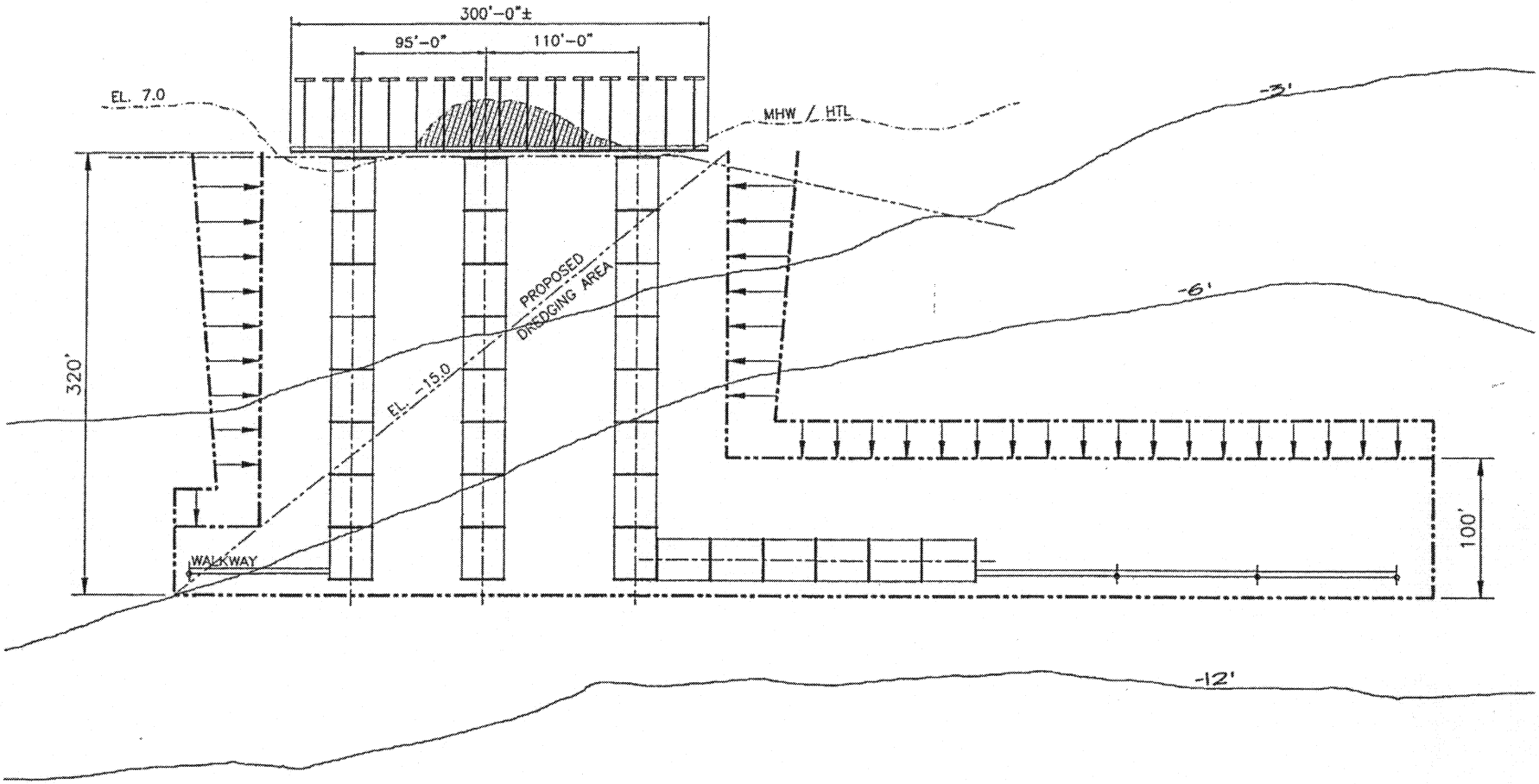

SOUTH TRESTLE PIER ENLARGED PLAN

SCALE: 1" = 120'

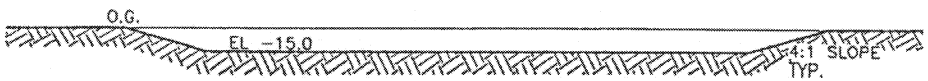

DREDGING CROSS SECTION – TYP.

SCALE: 1" = 120'

APPLICANT:	PURPOSE:	ADJ. PROP. OWNER:
KIEWIT PACIFIC CO. P.O. BOX 1769 VANCOUVER WA 98668	DREDGING FOR PIER CONSTRUCTION & VESSEL DOCKING	CITY OF VALLEJO IN MARE ISLAND STRAIT SOLANO CO., CA

SMITH & MONROE & GRAY ENGINEERS, INC.
PARK PLAZA WEST, SUITE 210
10700 S.W. BEAVERTON HWY.
BEAVERTON, OREGON 97005
PHONE: (503) 643-8598
FAX: (503) 643-8010

KIEWIT PACIFIC
VALLEJO YARD
PHASE 2 DREDGING PLAN & SECTION
SHEET 5 OF 5

DRAWN BY	DATE	CHKD BY	DATE	SCALE	DWG. NO.	REV.
D. KEARL	9/8/97			AS NOTED	97-178A-04	