FILE NO. 25878N

Encl 1

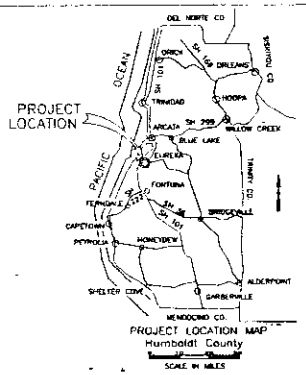

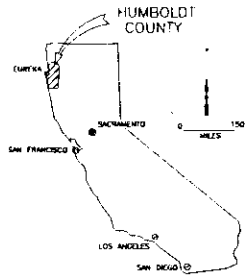

CITY OF EUREKA
MAD RIVER PARALLEL PIPELINE
NORTH/SOUTH SECTION

BID NO. 2002-3

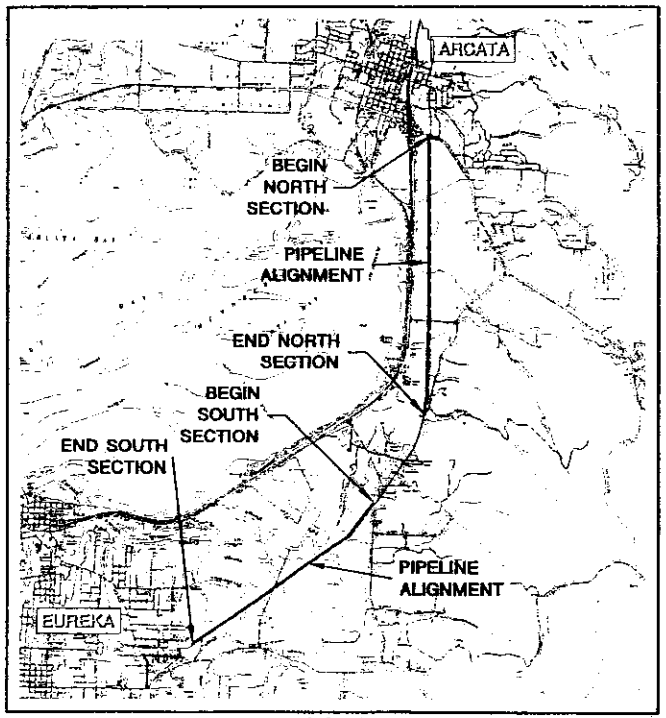

VICINITY MAP
SCALE: 1" = ½ MILE ±

CITY OF EUREKA, CALIFORNIA
APRIL 2002

CITY MAYOR: NANCY FLEMMING

CITY COUNCIL:
CHERIE ARKLEY
VIRGINIA BASS-JACKSON
MAXINE HUNTER-MEEKS
CHRIS KERRIGAN
JACK McKELLAR

CITY MANAGER: DAVID W. TYSON

APPROVED BY:

BRENT SIEMER
CITY ENGINEER/PUBLIC WORKS DIRECTOR
RCE NO. 33559

DATE

THIS PRINT HAS BEEN REDUCED

SHEET INDEX

SHEET #	DRAWING #	DESCRIPTION
1	G1	COVER
2	G2	ABBREVIATIONS, LEGEND & GENERAL NOTES
3	G3	KEY SHEET AND PROJECT ACCESS – NORTH SECTION
4	G4	KEY SHEET AND PROJECT ACCESS – SOUTH SECTION
5	G5	SURVEY CONTROL – NORTH SECTION
6	G6	SURVEY CONTROL – SOUTH SECTION
7	C1	PLAN AND PROFILE, STA. 10+00 TO 31+00
8	C2	PLAN AND PROFILE, STA. 31+00 TO 53+00
9	C3	PLAN AND PROFILE, STA. 53+00 TO 75+00
10	C4	PLAN AND PROFILE, STA. 75+00 TO 97+00
11	C5	PLAN AND PROFILE, STA. 97+00 TO 119+00
12	C6	PLAN AND PROFILE, STA. 119+00 TO 141+00
13	C7	PLAN AND PROFILE, STA. 141+00 TO 157+00
14	C8	PLAN AND PROFILE, STA. 212+00 TO 234+00
15	C9	PLAN AND PROFILE, STA. 234+00 TO 256+00
16	C10	PLAN AND PROFILE, STA. 256+00 TO 278+00
17	C11	PLAN AND PROFILE, STA. 278+00 TO 300+00
18	C12	PLAN AND PROFILE, STA. 300+00 TO 323+00
19	C13	PLAN AND PROFILE, STA. 323+00 TO 334+50
20	C14	DETAILS
21	C15	DETAILS
22	C16	DETAILS
23	C17	DETAILS
24	C18	DETAILS
25	C19	DETAILS

Oscar Larson & Associates
Consulting Engineers • Land Surveyors
317 Third Street • P.O. Box 3806 • Eureka, CA 95502

PRINT DATE

COVER SHEET

MAD RIVER PARALLEL PIPELINE
NORTH/SOUTH SECTION
CITY OF EUREKA

Scale: AS NOTED
Job No. 6771.3
Drawing No. G1
1 of 25

Date: 5-22-02

Sheet 1 of 10

ENCL 1

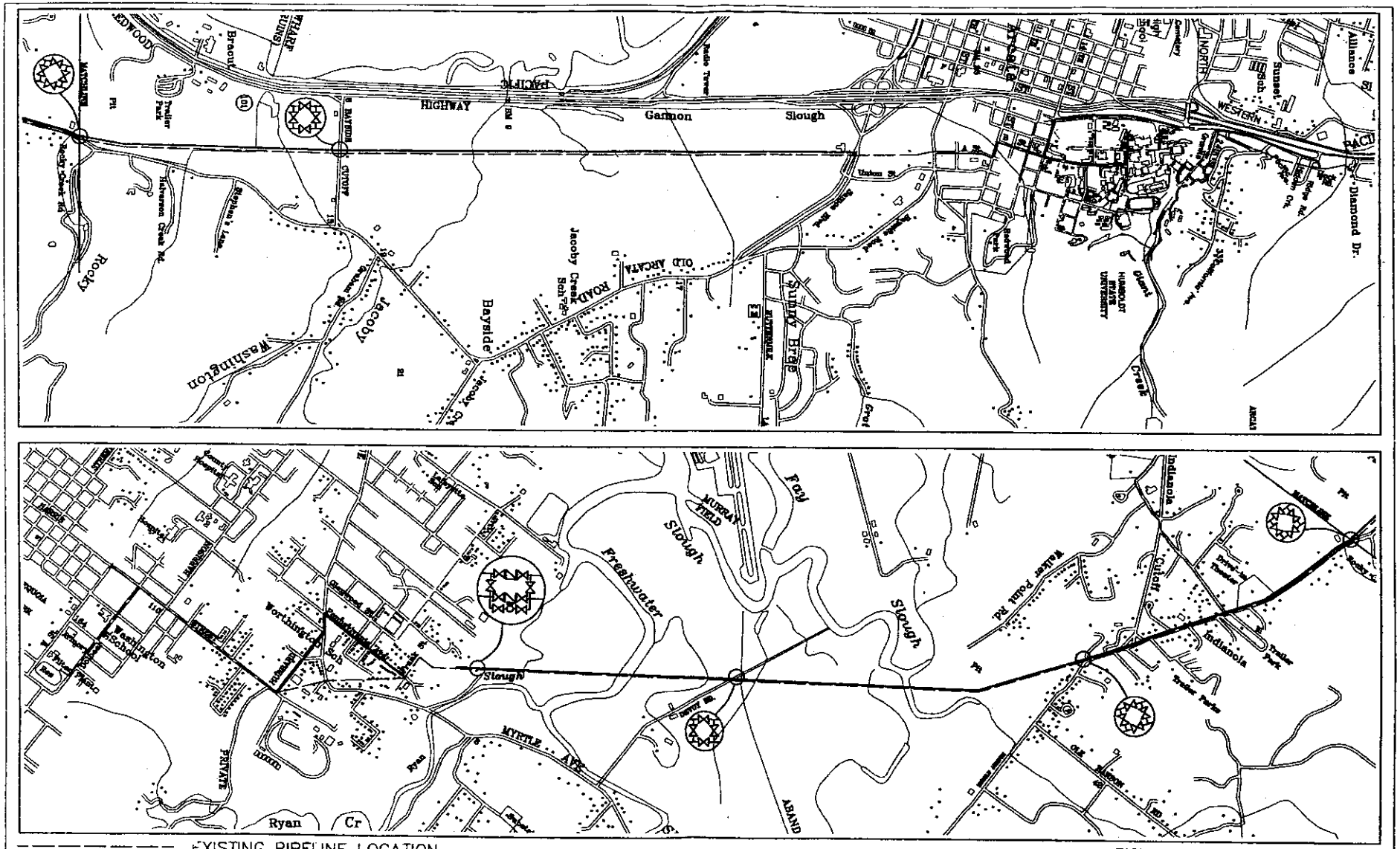

EXISTING PIPELINE LOCATION
PLANNED RELOCATION

© 2001 Oscar Larson & Associates

FIGURE 1
PROPOSED PROJECT
OSCAR LARSON & ASSOCIATES

DATE: 5-22-02

SHEET 2 OF 10

FILE NO. 25878N

ENCL 1

Figure 2 - Revised 4-22-02

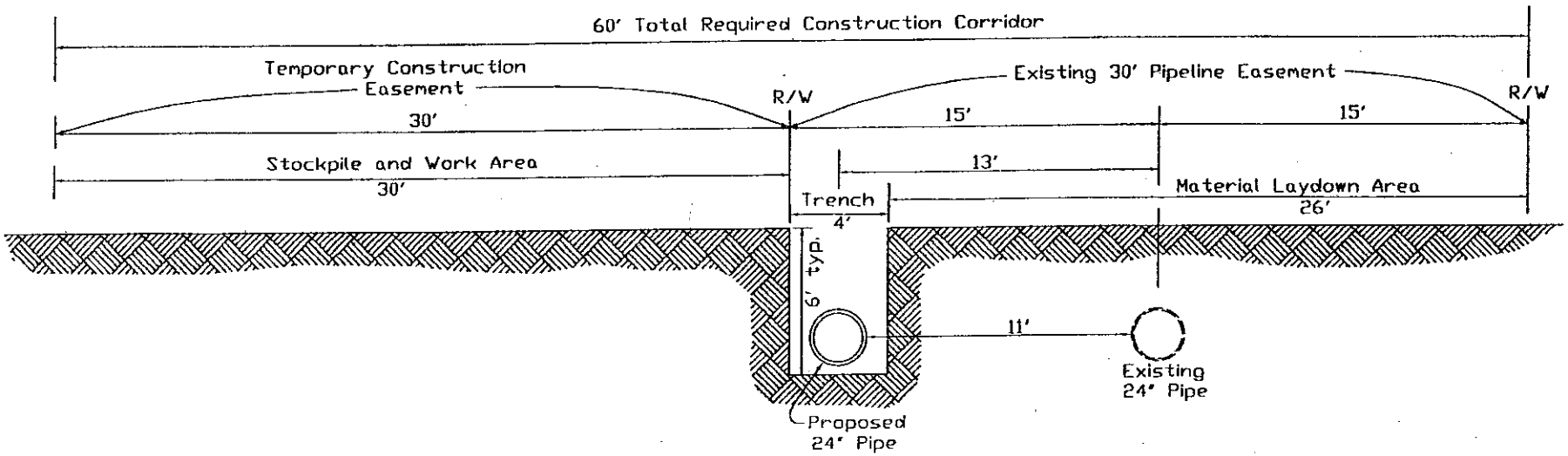

Typical Pipeline Construction
Section through Diked Former Tidelands

DATE: 5-22-02

SHEET 3 OF 10

FILE NO. 25878N

ENCL 1

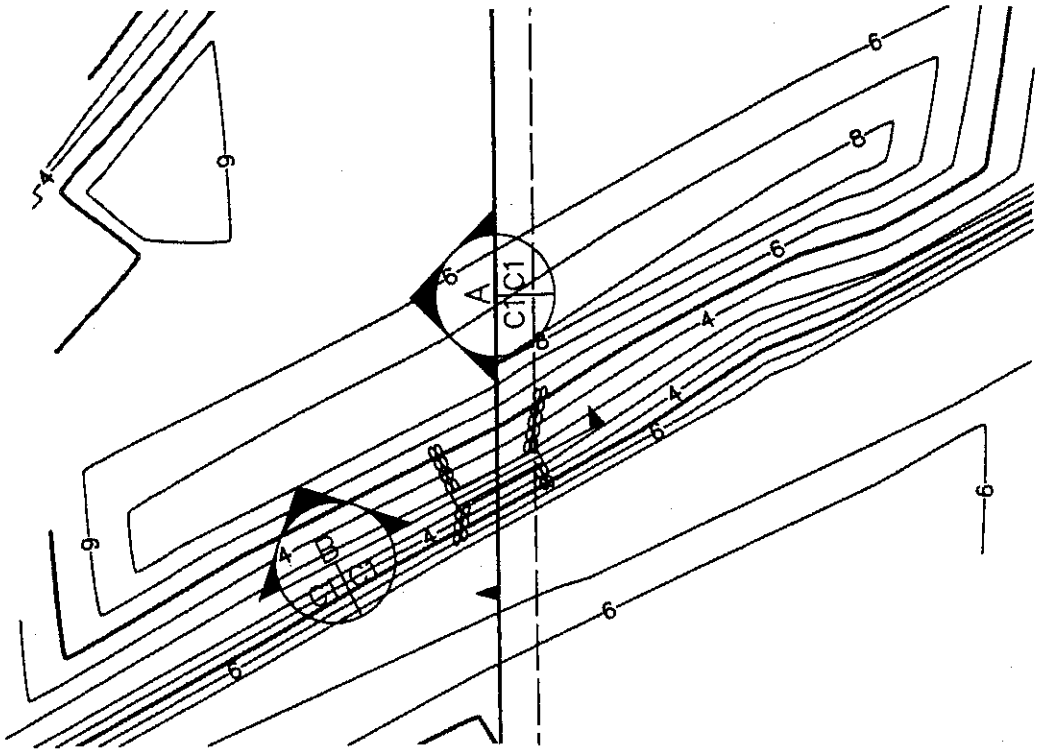

1 C1 C1 GROTZMAN/BEITH CREEK CROSSING
1"=40'

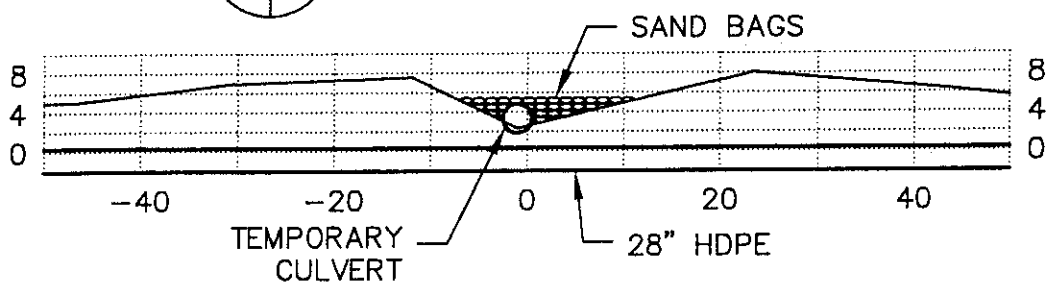

A C1 C1 GROTZMAN/BEITH CREEK SECTION
1"=20'

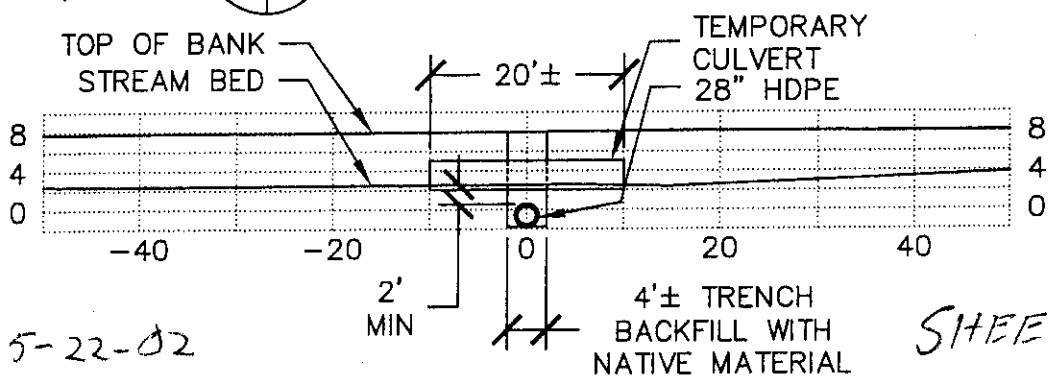

DATE: 5-22-02

SHEET 4 of 10

B C1 C1 GROTZMAN/BEITH CREEK SECTION
1"=20'

NOTE:
28" HDPE HAS 24" INSIDE DIAMETER

City of Eureka – JN:6771.2 – 8/9/01

FIGURE 3
GROTZMAN/BEITH CREEK
OSCAR LARSON & ASSOCIATES

© 2001 Oscar Larson & Associates

FILE NO. 258781N

EXCL 1

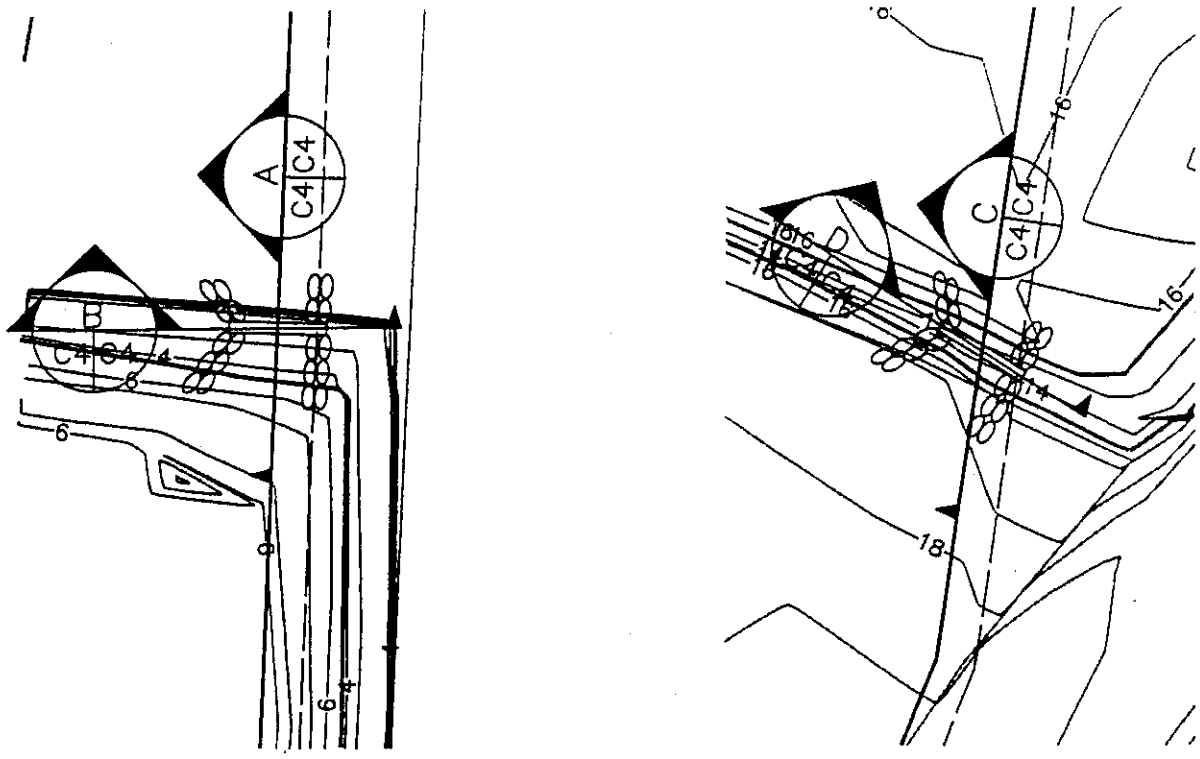

1 C4 C4 ROCKY GULCH CREEK CROSSINGS
1"=40'

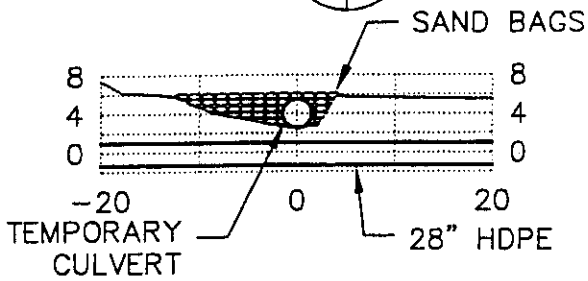

A C4 C4 ROCKY GULCH CREEK SECTION
1"=20'

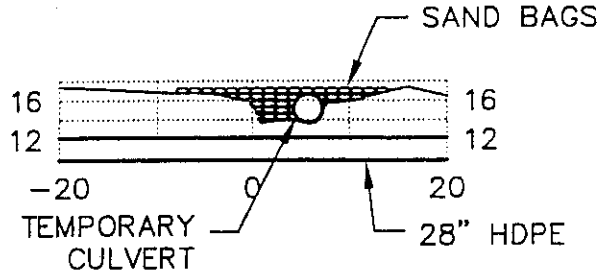

C C4 C4 ROCKY GULCH CREEK SECTION
1"=20'

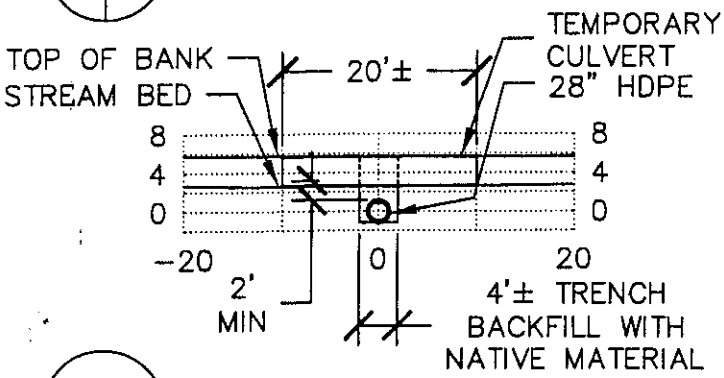

B C4 C4 ROCKY GULCH CREEK SECTION
1"=20'

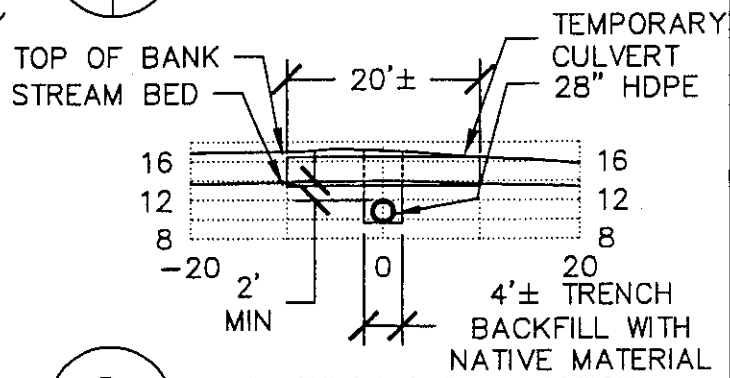

D C4 C4 ROCKY GULCH CREEK SECTION
1"=20'

SHEET 5 OF 10

NOTE:
28" HDPE HAS 24" INSIDE DIAMETER

FIUGRE 4
ROCKY GULCH CREEK
OSCAR LARSON & ASSOCIATES

City of Eureka – JN:6771.2 – 8/7/01

© 2001 Oscar Larson & Associates

DATE: 5-22-02

FILE NO. 25878N

ENCL 1

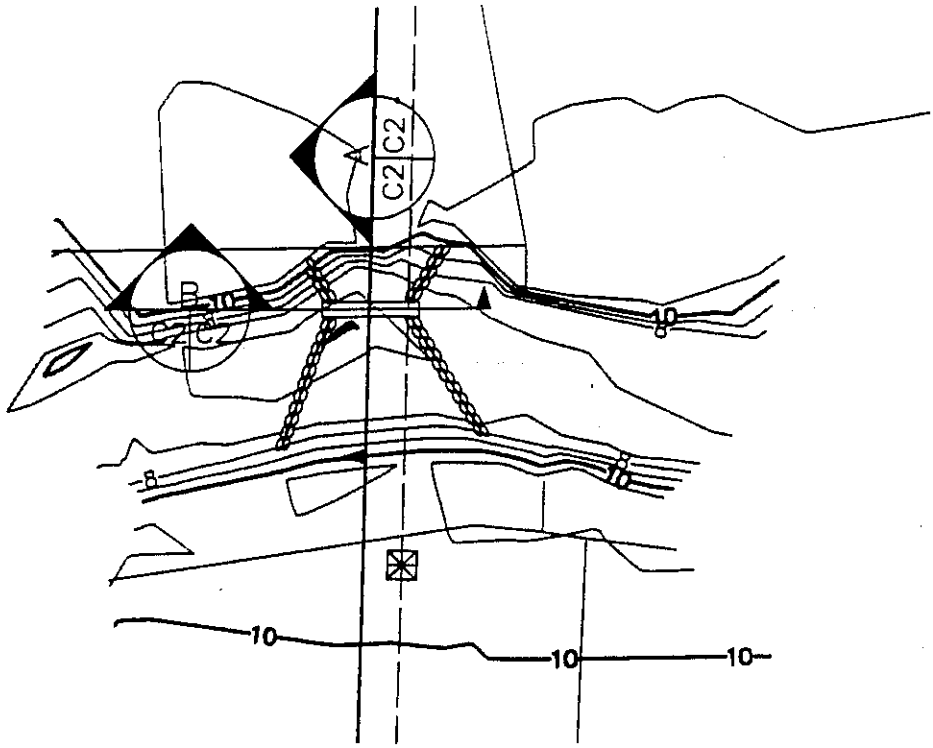

1 C2 C2 JACOBY CREEK CROSSING
1"=40'

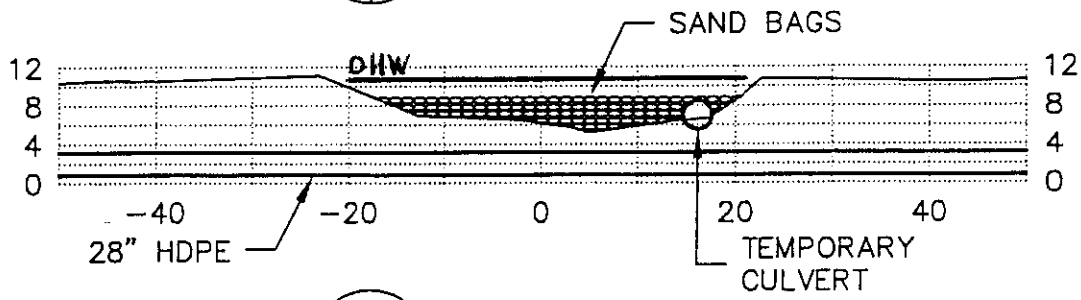

A C2 C2 JACOBY CREEK SECTION
1"=20'

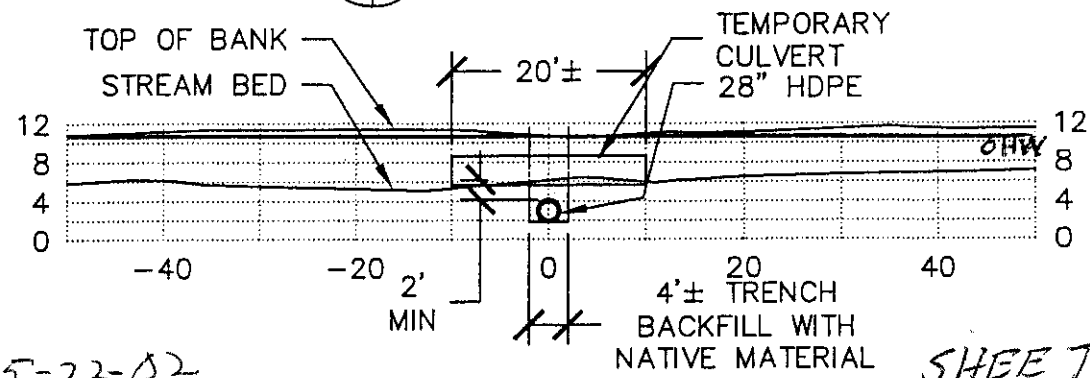

DATE: 5-22-02

SHEET 6 of 10

B C2 C2 JACOBY CREEK SECTION
1"=20'

NOTE:
28" HDPE HAS 24" INSIDE DIAMETER

FIGURE 5
JACOBY CREEK
OSCAR LARSON & ASSOCIATES

City of Eureka – JN:6771.2 – 6/7/01

© 2001 Oscar Larson & Associates

FILE NO. 25878N

ENCL. 1

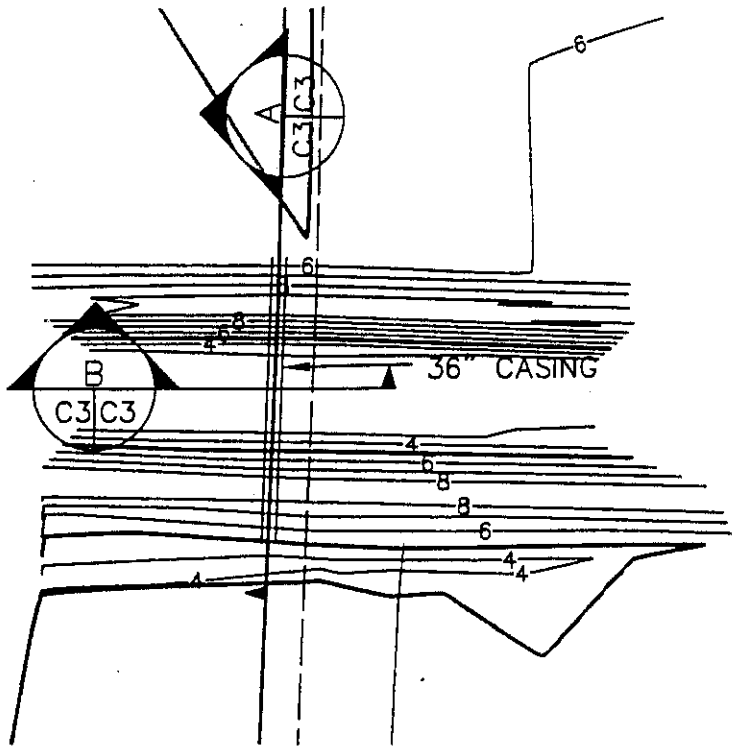

1 C3 C3 WASHINGTON GULCH SLOUGH CROSSING
1"=40'

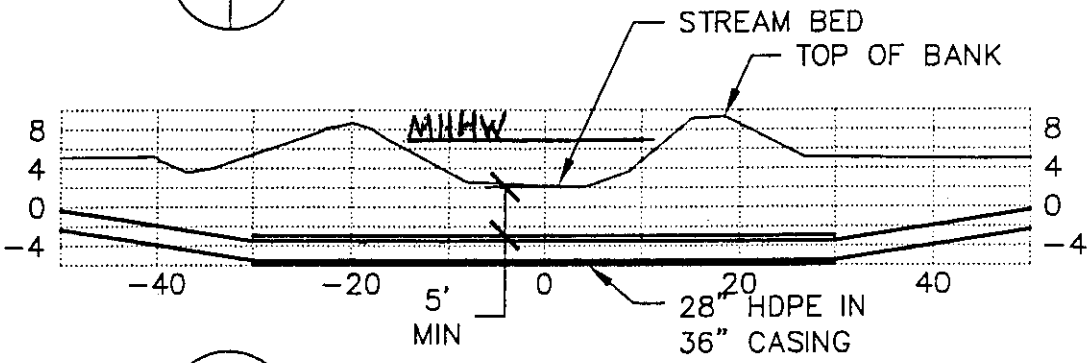

A C3 C3 WASHINGTON GULCH SLOUGH SECTION
1"=20'

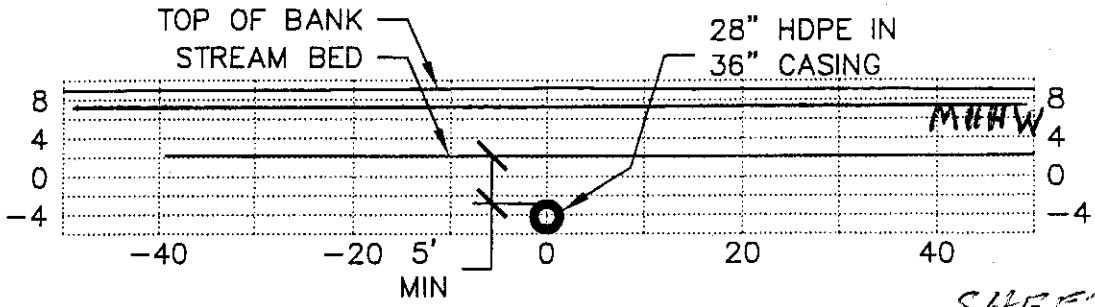

DATE: 5-22-02

B C3 C3 WASHINGTON GULCH SLOUGH SECTION
1"=20'

SHEET 7 of 10

NOTE:
28" HDPE HAS 24" INSIDE DIAMETER

City of Eureka – JN:8771.2 – 8/7/01

© 2001 Oscar Larson & Associates

FIGURE 6
WASHINGTON GULCH SLOUGH
OSCAR LARSON & ASSOCIATES

FILE NO. 25878N

ENCL 1

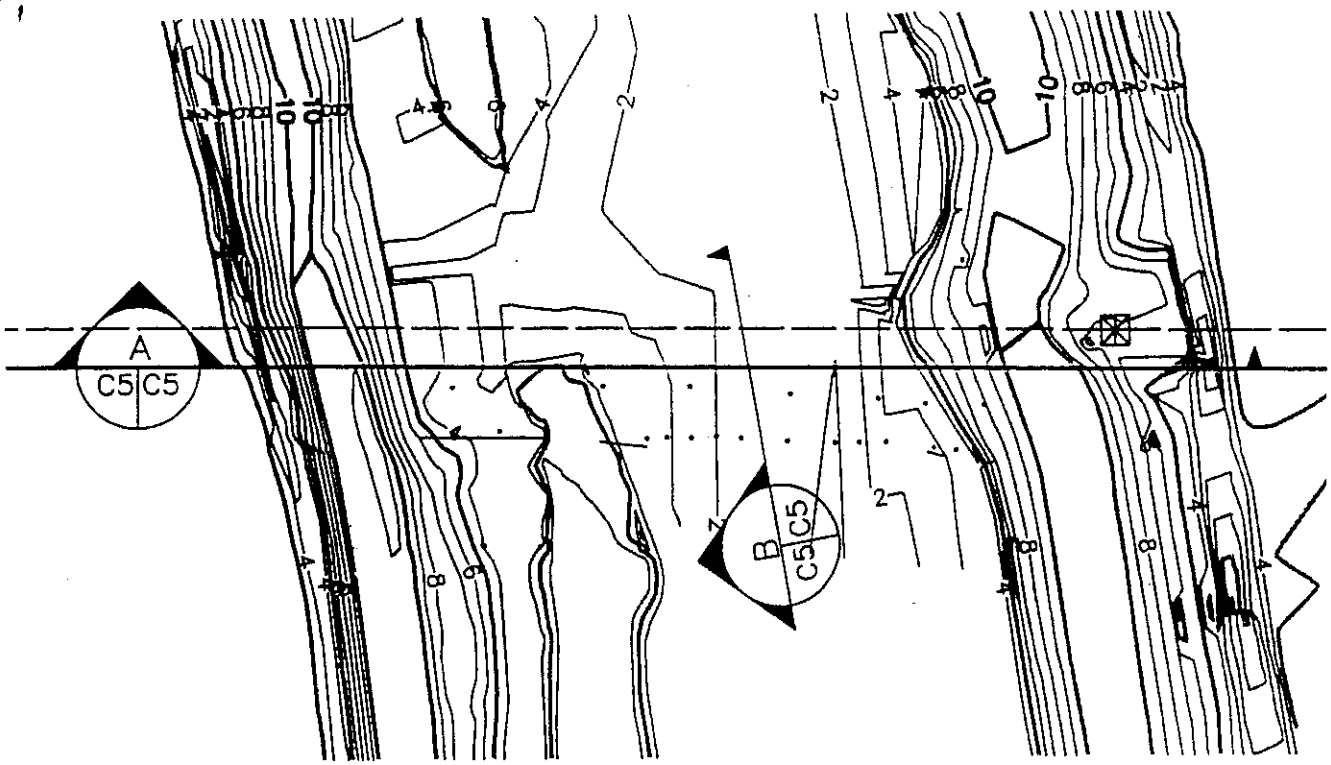

1 FAY SLOUGH CROSSING
C5 C5 1"=40'

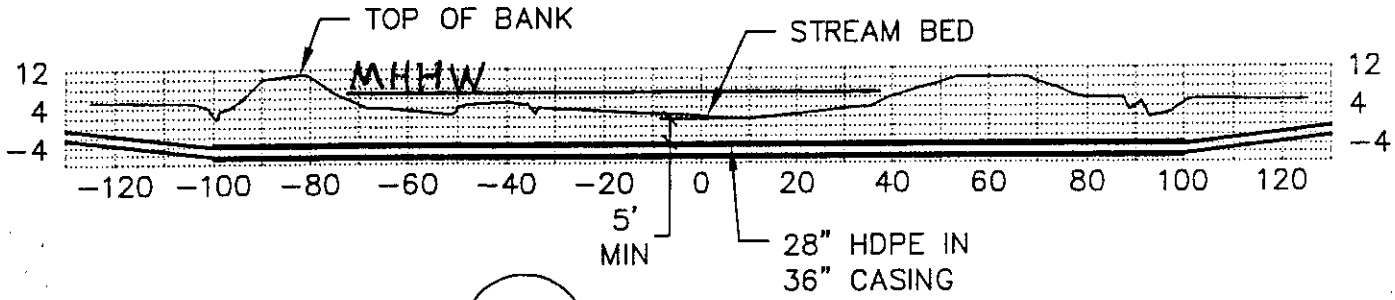

A FAY SLOUGH SECTION
C5 C5 1"=40'

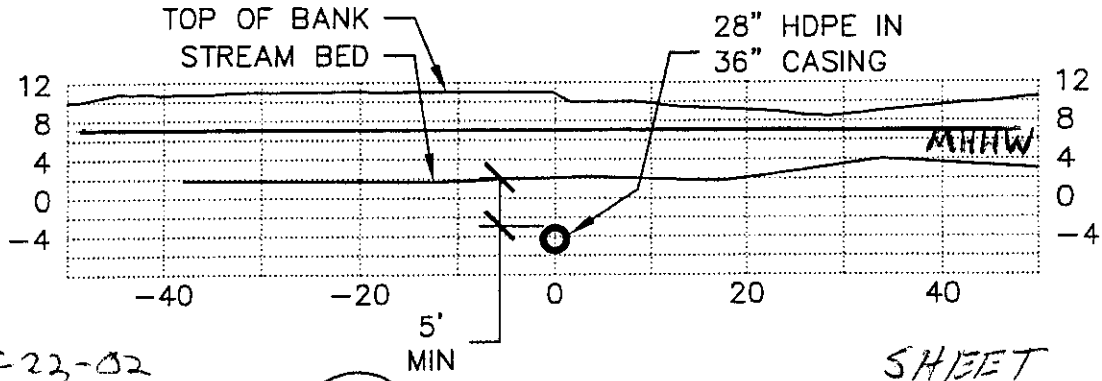

DATE: 5-22-02

SHEET 8 of 10

B FAY SLOUGH SECTION
C5 C5 1"=20'

NOTE:
28" HDPE HAS 24" INSIDE DIAMETER

FIGURE 7
FAY SLOUGH
OSCAR LARSON & ASSOCIATES

City of Eureka – JN:6771.2 – 8/7/01

© 2001 Oscar Larson & Associates

FILE NO. 25878N

ENCL 1

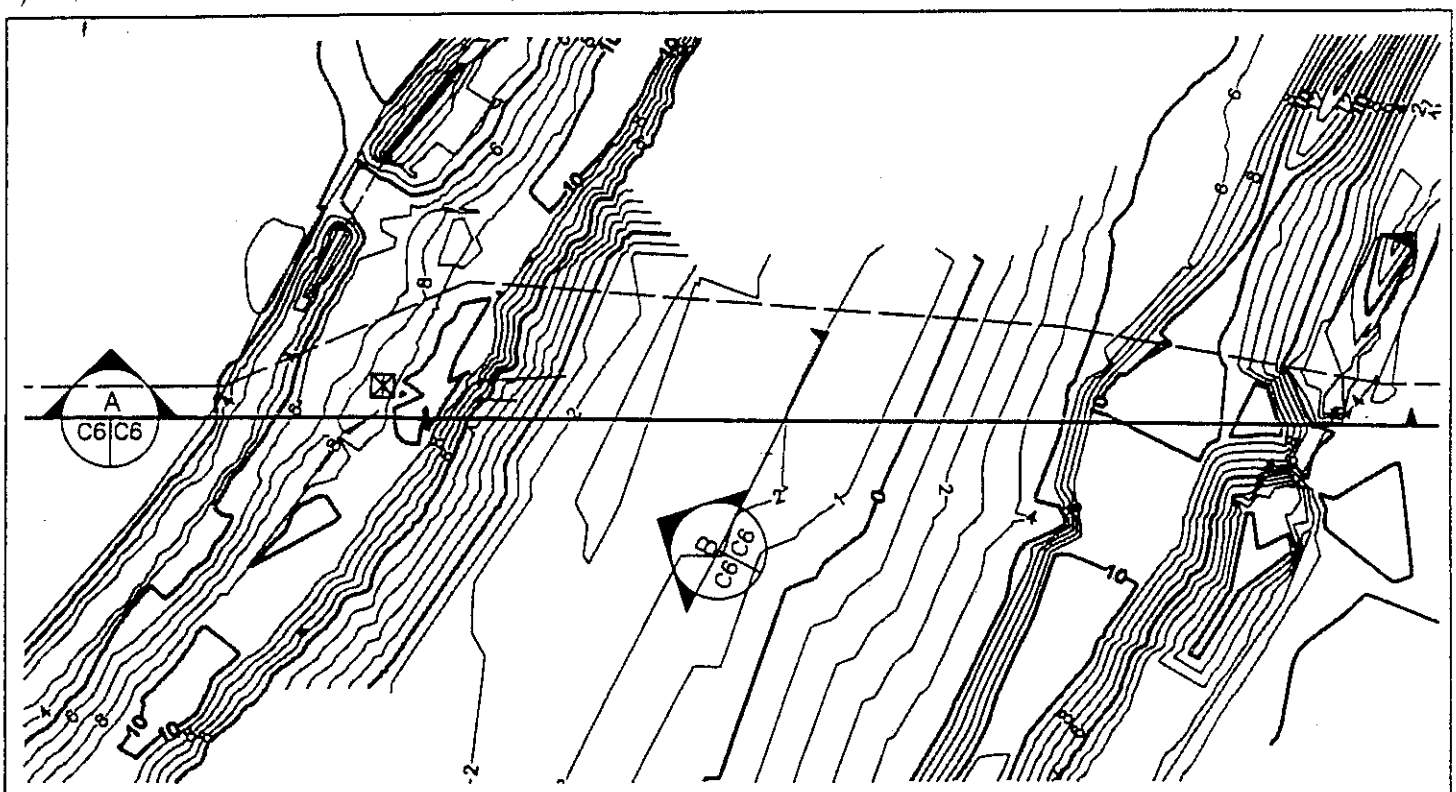

1 FRESHWATER SLOUGH CROSSING
C6 C6 1"=50'

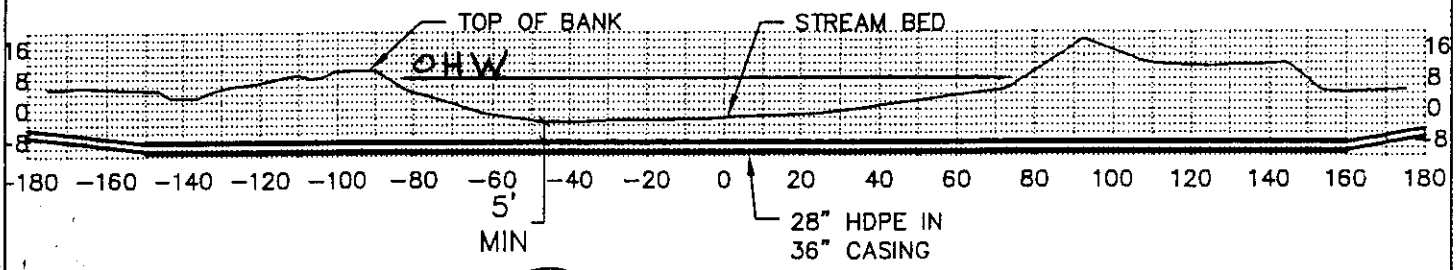

A FRESHWATER SLOUGH SECTION
C6 C6 1"=50'

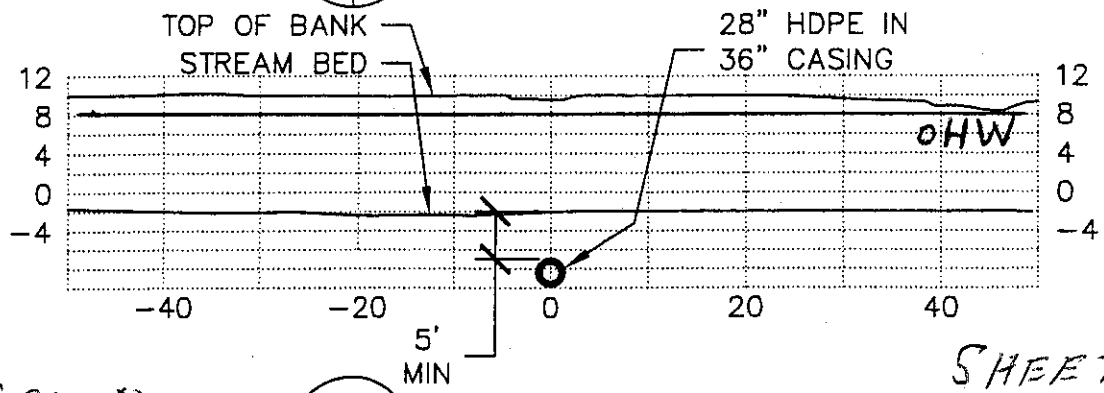

DATE: 5-22-02

B FRESHWATER SLOUGH SECTION
C6 C6 1"=20'

SHEET 9 of 10

NOTE:
28" HDPE HAS 24" INSIDE DIAMETER

FIGURE 8
FRESHWATER SLOUGH
OSCAR LARSON & ASSOCIATES

City of Eureka – JN:6771.2 – 8/7/01

© 2001 Oscar Larson & Associates

FILE NO. 25878N

FIG 2 1

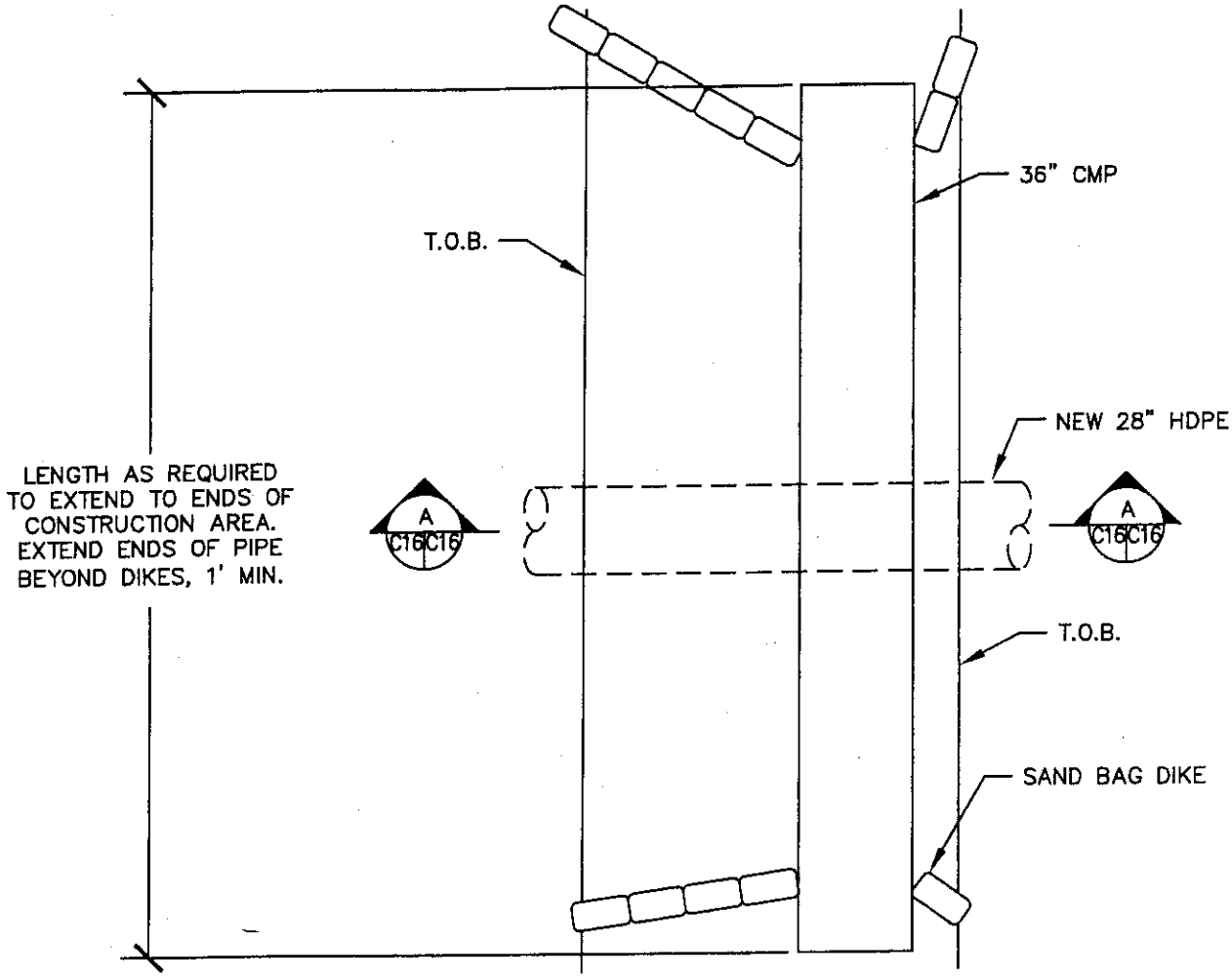

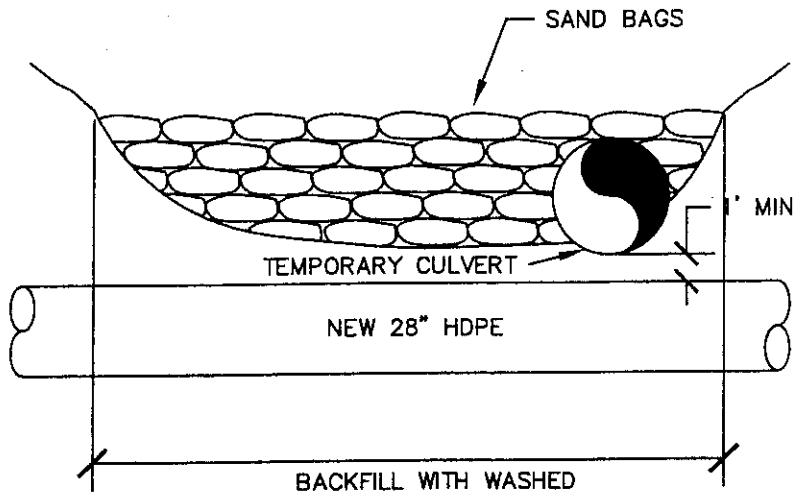

NOTES:

1. AT JACOBY CREEK THE CULVERT IS TO BE PLACED OUTSIDE THE FLOWING STREAM UNDER THE DIRECTION OF A FISHERIES BIOLOGIST RETAINED BY THE OWNER. AT THE OTHER CROSSINGS THE CULVERT MAY BE PLACED DIRECTLY IN THE STREAM.
2. SAND BAGS ARE TO BE FILLED WITH WASHED SAND AND TO BE PLACED WITH CARE TO MINIMIZE SEDIMENTATION.
3. THE STREAM BED AND BANKS SHALL BE RESTORED TO THEIR ORIGINAL CONDITIONS PRIOR TO REMOVAL OF THE CULVERT.

DATE: 5-22-02

A C16C16 SECTION

SHEET 10 of 10

2 FLOWING OR TIDAL STREAM CROSSING

C2	C4	C6	C7	C16

NTS

City of Eureka – JN:6771.2 – 4/17/02

OSCAR LARSON & ASSOCIATES

© 2002 Oscar Larson & Associates