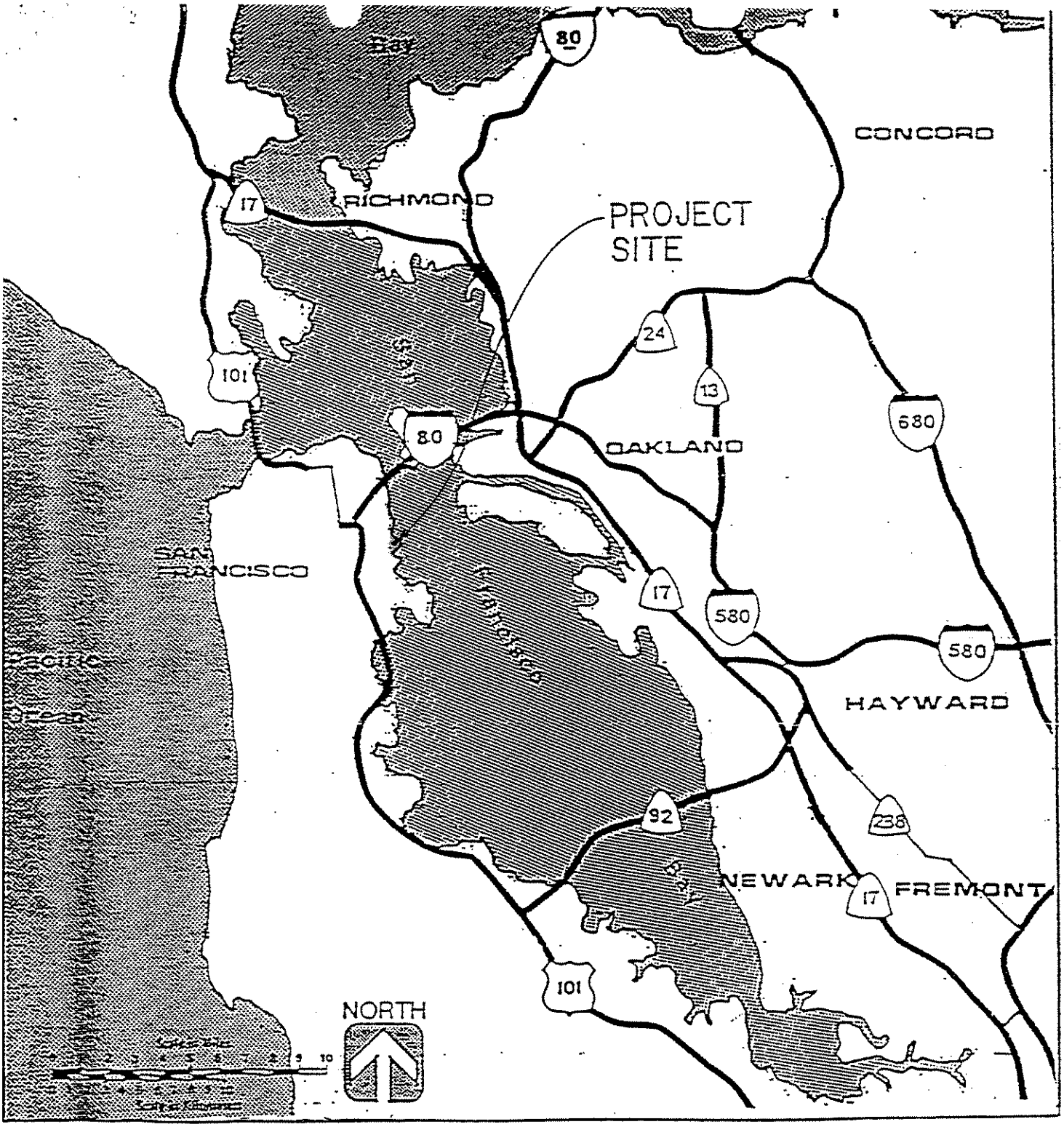

PURPOSE: MAINTENANCE DREDGING TO PROVIDE SAFE NAVIGATIONAL WATERS FOR VESSELS

DATUM: MLLW
ADJACENT PROPERTY OWNERS

PORT OF SAN FRANCISCO

BAY AREA LOCATION

PROPOSED - DREDGING NEXT TO PIERS

IN: SAN FRANCISCO BAY
AT: SANFRANCISCO DRYDOCK INC.
COUNTY OF: SAN FRAN.
STATE: CALIFORNIA

CITY OF SAN FRANCISCO

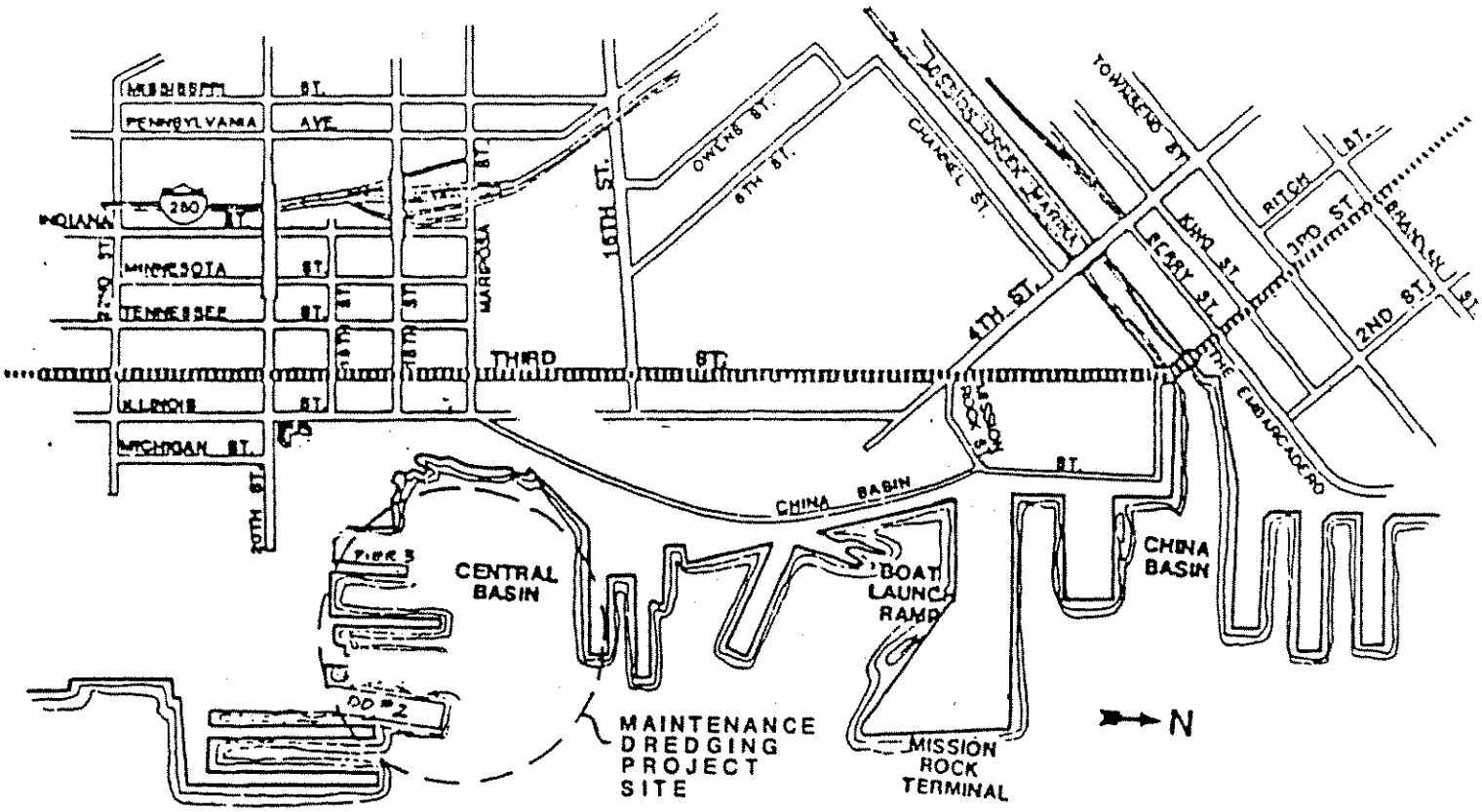

SAN FRANCISCO BAY

PURPOSE: MAINTENANCE DREDGING TO PROVIDE SAFE NAVIGATIONAL WATERS FOR VESSELS DATUM: MLLW ADJACENT PROPERTY OWNERS PORT OF SAN FRANCISCO	VICINITY MAP Date: Sheet of	PROPOSED - DREDGING NEXT TO PIERS AND UNDER TWO (2) FLOATING DRYDOCKS. IN: SAN FRANCISCO BAY AT: SANFRANCISCO DRYDOCK INC. COUNTY OF: SAN FRAN. STATE: CALIFORNIA

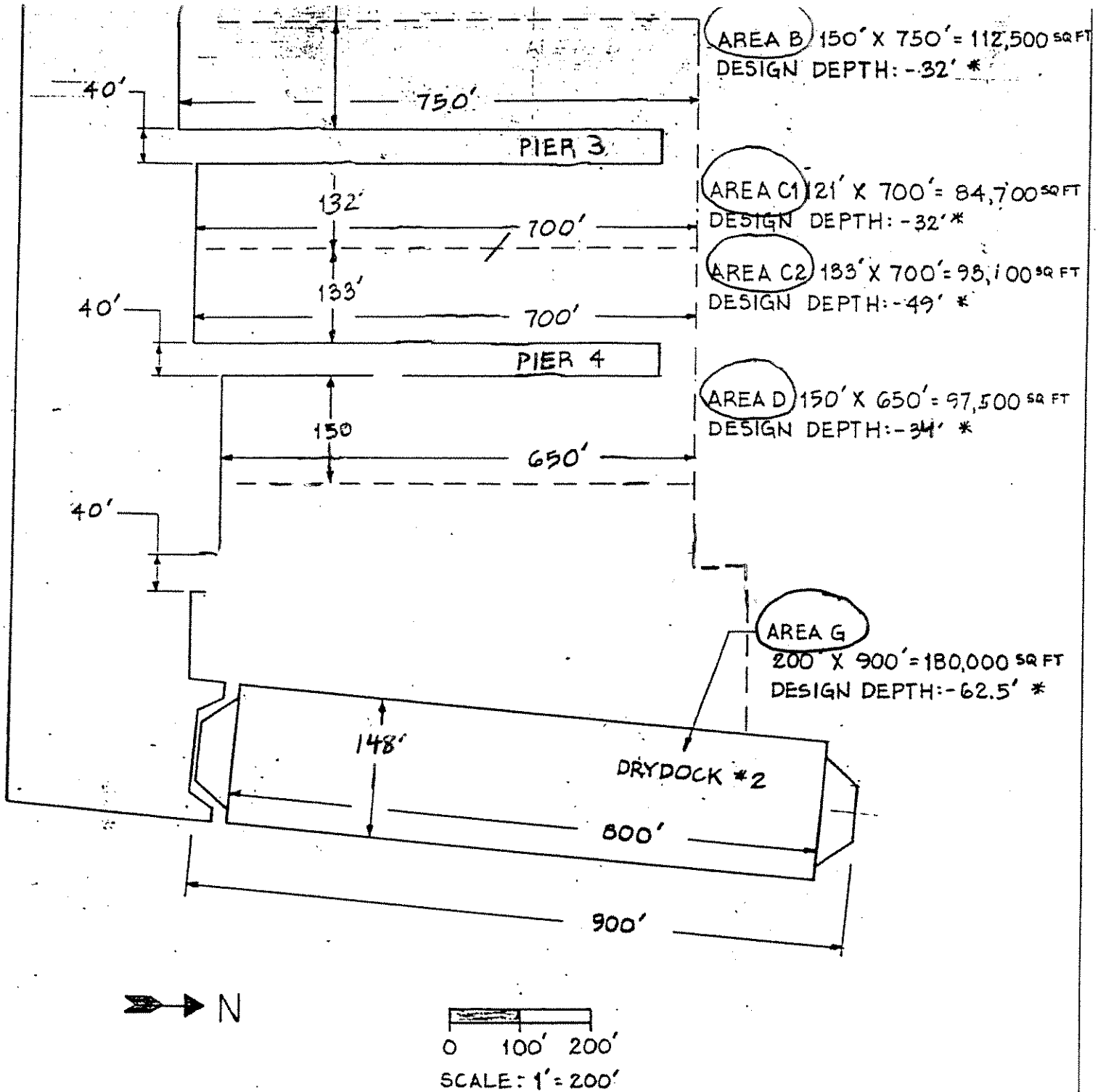

* 2'-0 ALLOWABLE OVER DEPTH IN EACH OF THE ABOVE AREA'S.

Purpose: Maintenance dredging to provide safe Navigational waters Datum: MLLW Adjacent Property Owners Port of San Francisco	PROJECT SITE Date: Sheet	Proposed - Dredging next to piers IN: San Francisco Bay AT: San Francisco Drydock Inc. County of: San Francisco State: California

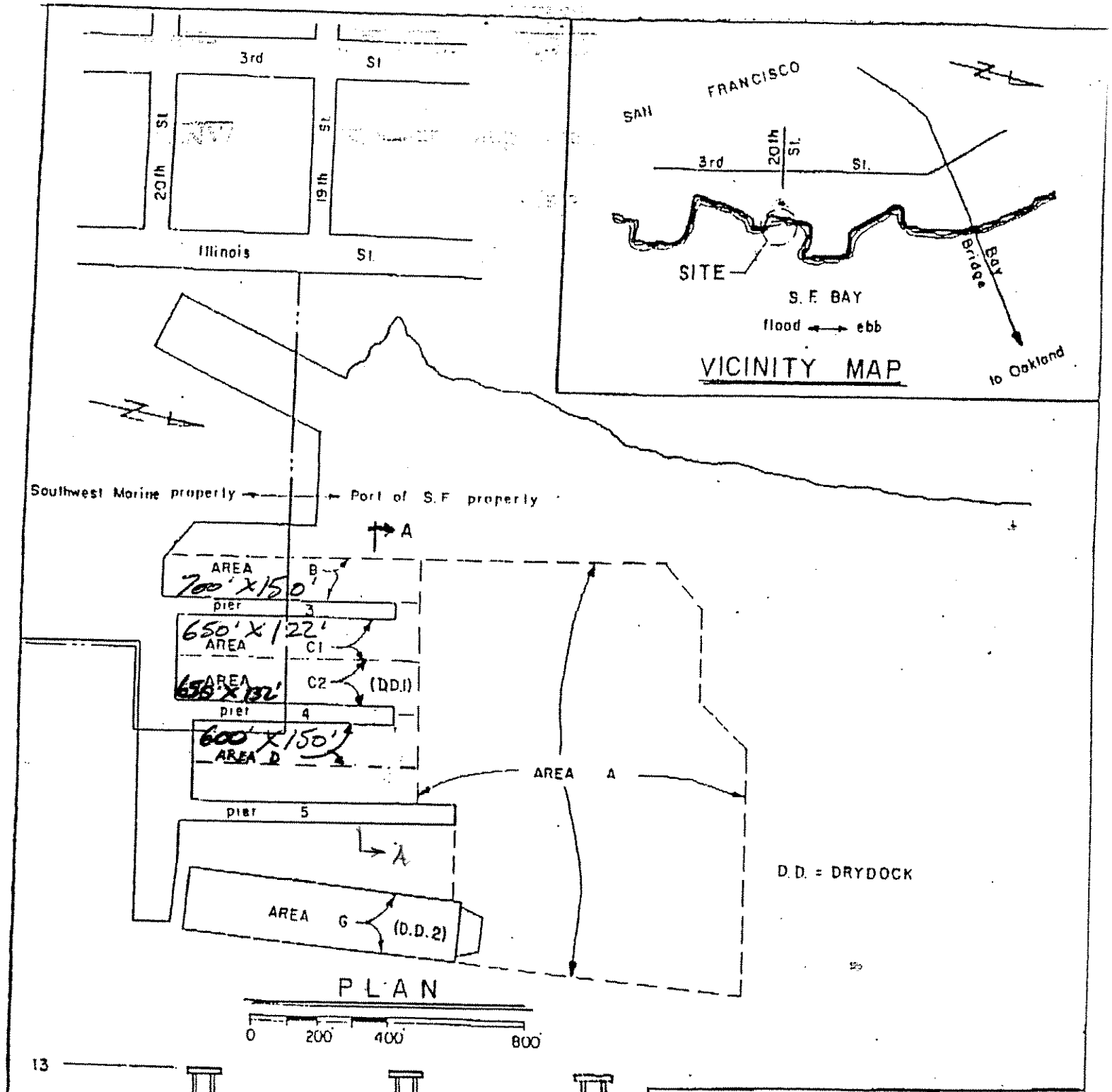

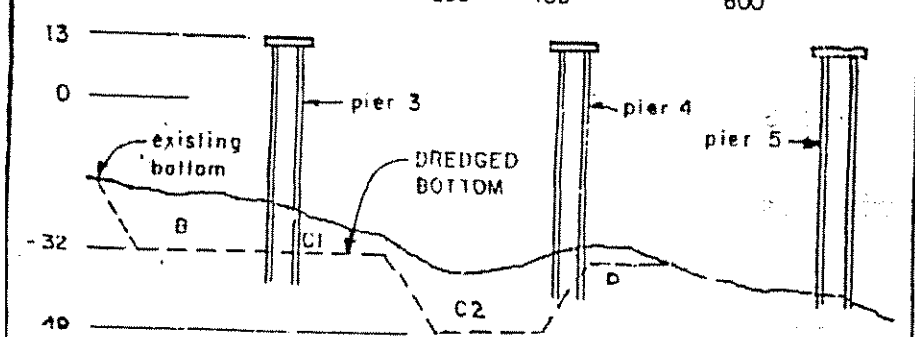

SECTION A

MAINTENANCE DREDGING

IN: San Francisco Bay

AT: San Francisco

APPLICATION BY: Southwest Marine

PURPOSE: Maintenance

DATUM: M.L.L.W.

DATE:

SHEET 1 of 1

CENTRAL BASIN

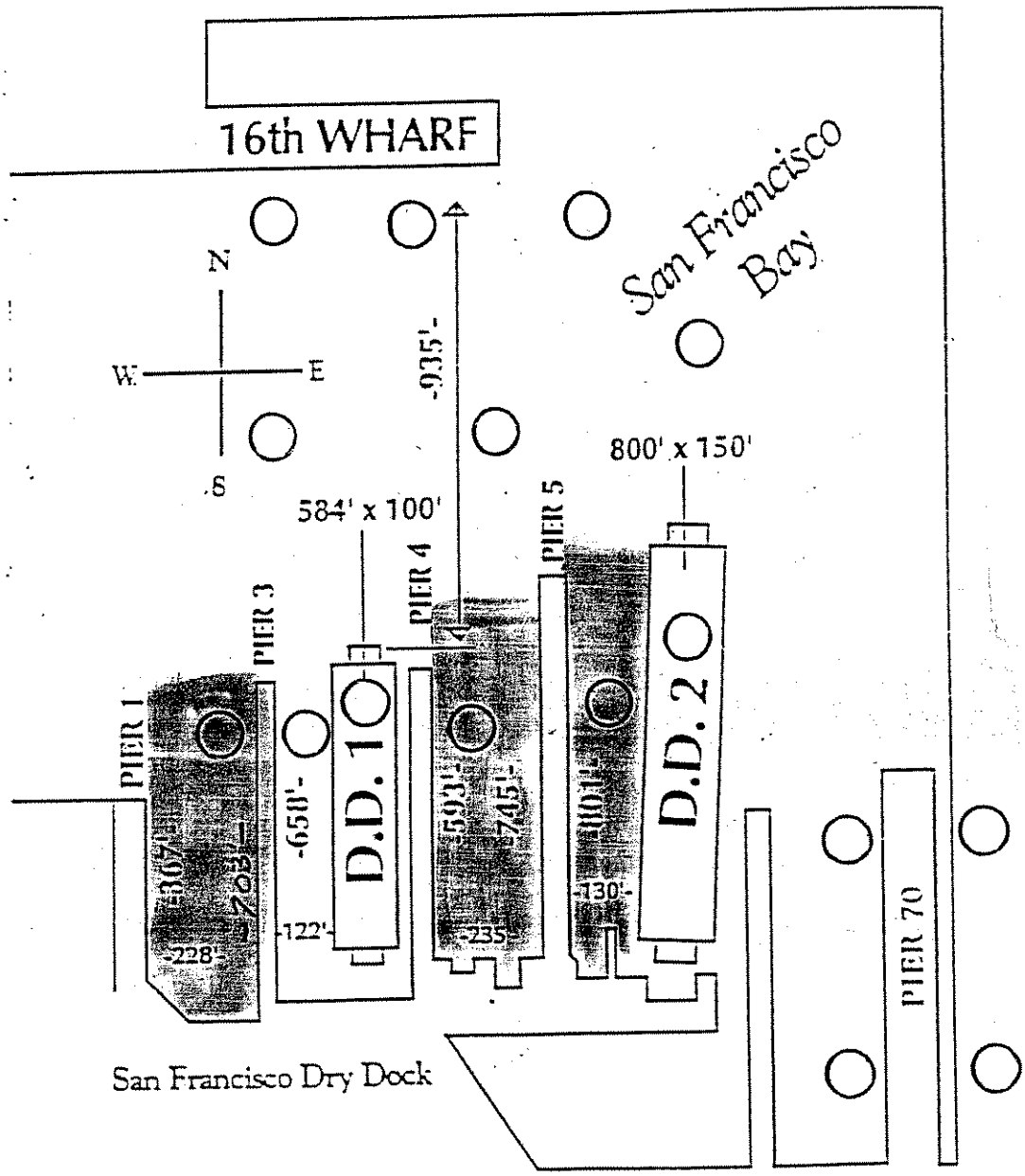

Figure 1

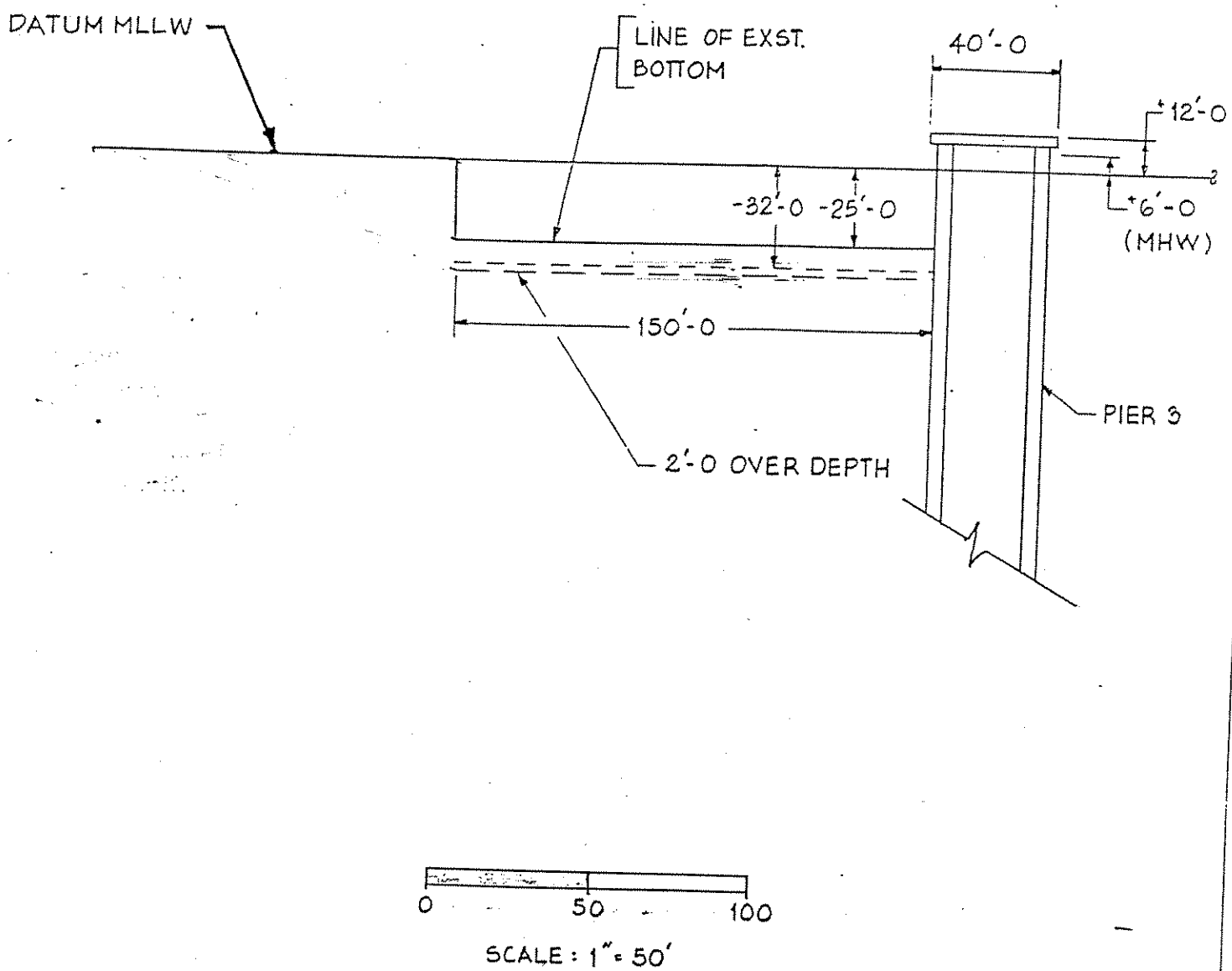

Purpose: Maintenance dredging to provide safe Navigational waters Datum: MLLW Adjacent Property Owners Port of San Francisco	**SECTION VIEW** Area B, Pier 3 West Date: 12/21/95 Sheet 3 of 5	Proposed - Dredging next to piers. IN: San Francisco Bay AT: San Francisco Drydock Inc. County of: San Francisco State: California

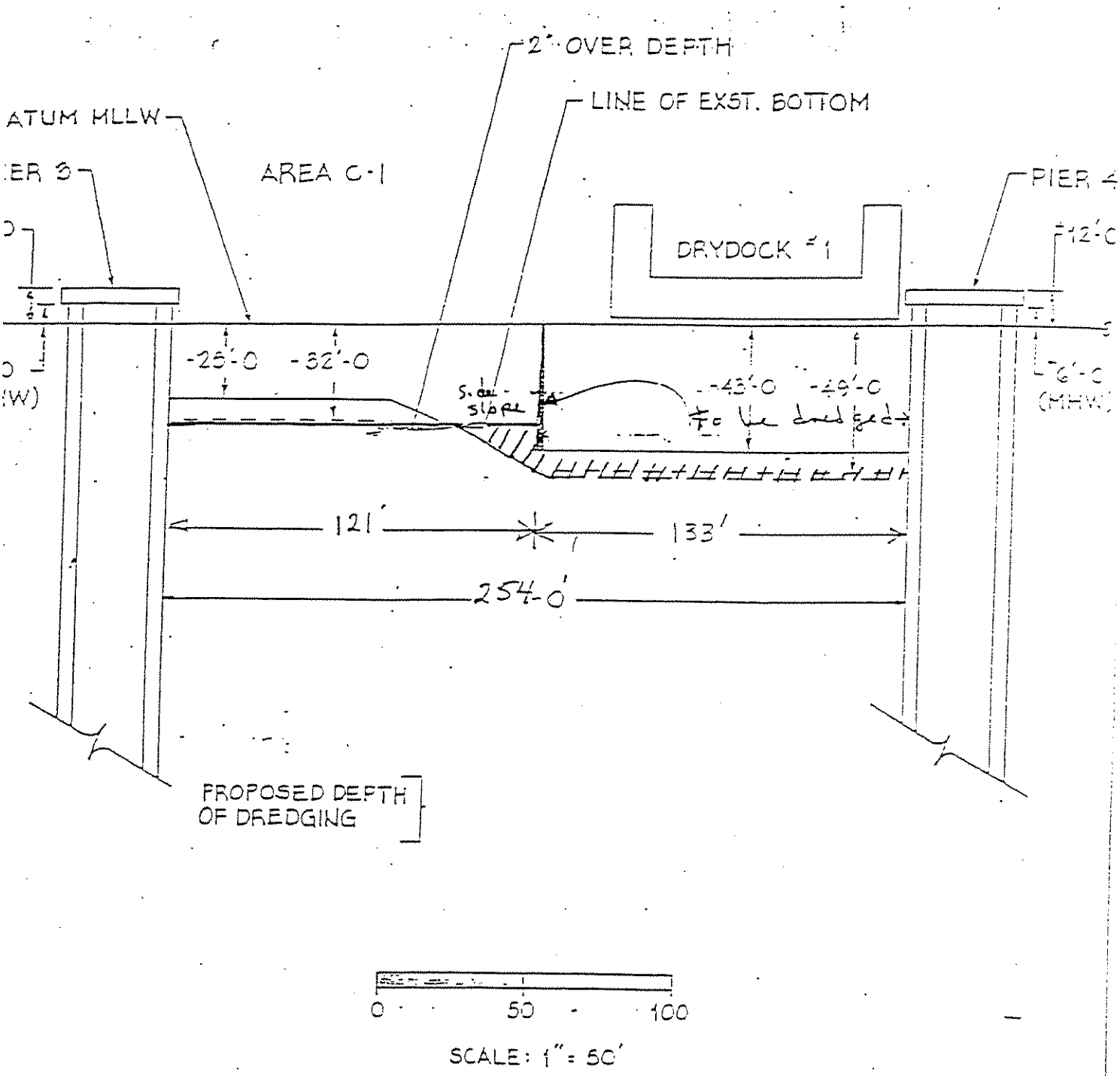

Purpose: Maintenance dredging to provide safe Navigational waters
Datum: MLLW
Adjacent Property Owners
Port of San Francisco

SECTION VIEW
Area C1

Proposed - Dredging next to piers.

IN: San Francisco Bay
AT: San Francisco Drydock Inc.
County of: San Francisco
State: California

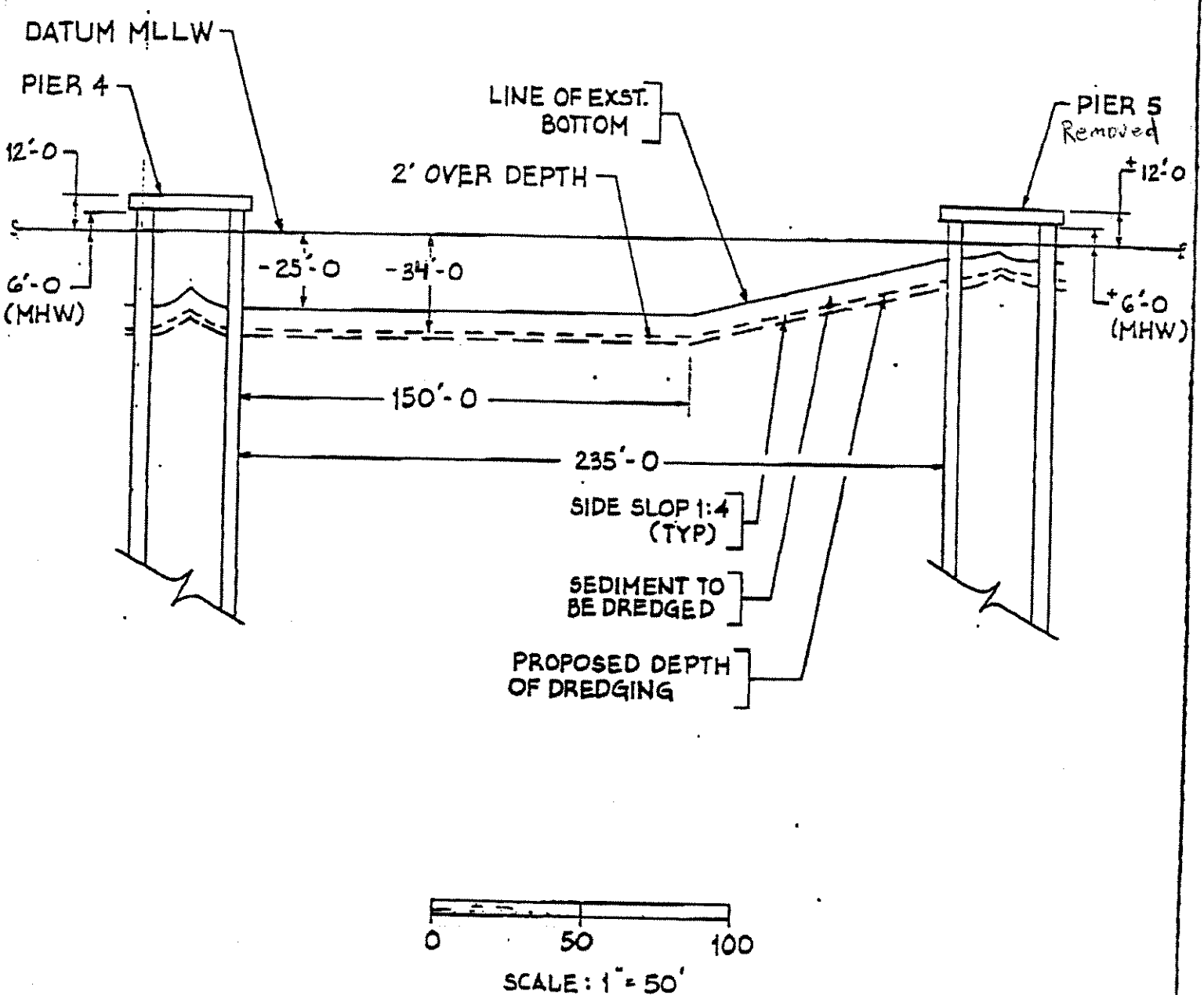

Purpose: Maintenance dredging to provide safe Navigational waters Datum: MLLW Adjacent Property Owners Port of San Francisco	**SECTION VIEW** Area D, Pier 4 East Exhibit E	Proposed - Dredging next to piers and under two (2) floating drydocks. IN: San Francisco Bay AT: San Francisco Drydock Inc. County of: San Francisco State: California

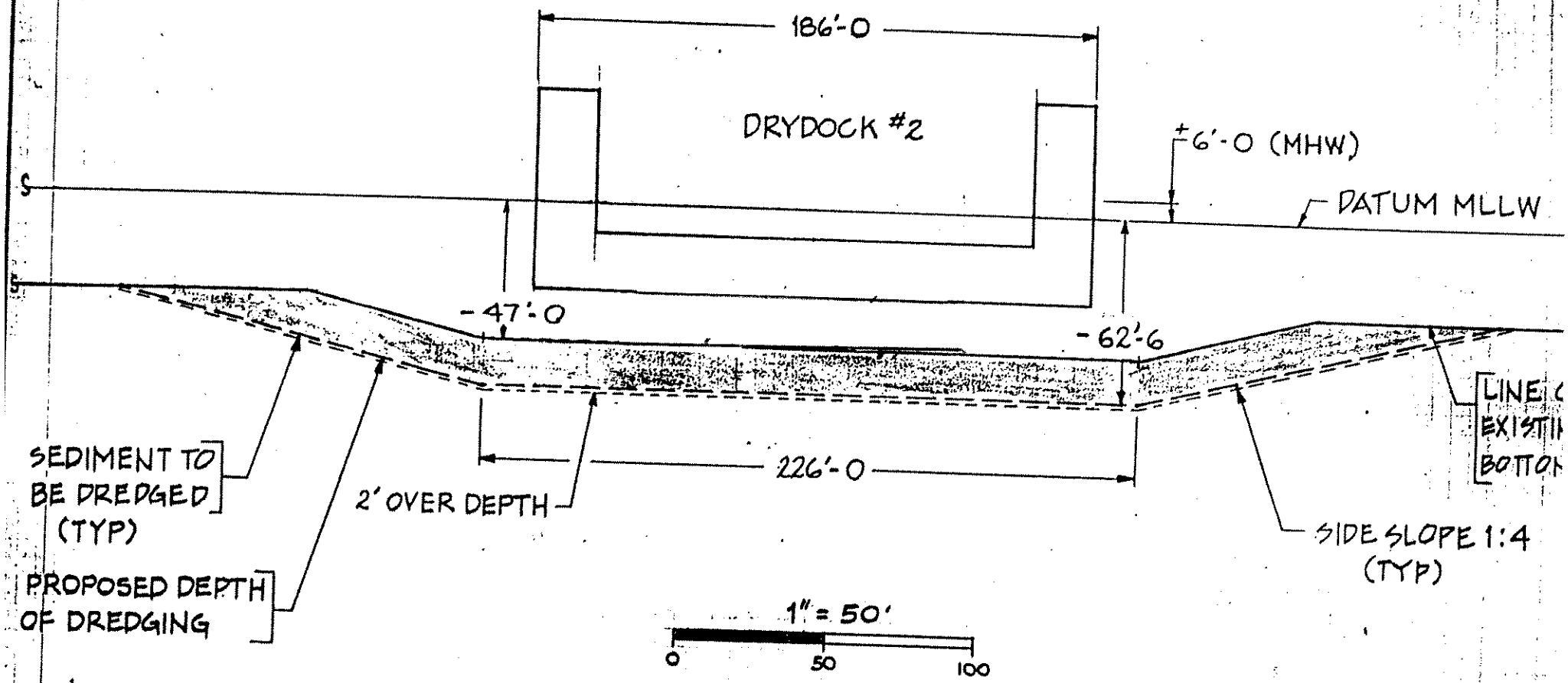

Purpose: Maintenance dredging to provide safe Navigational waters
Datum: MLLW
Adjacent Property Owners
Port of San Francisco

SECTION VIEW
Area G, Drydock #2

Date:

Sheet 7 of 8

Proposed - Dredging next to piers and under two (2) float drydocks.
IN: San Francisco Bay
AT: San Francisco Drydock
County of: San Francisco
State: California