Enclosure 1

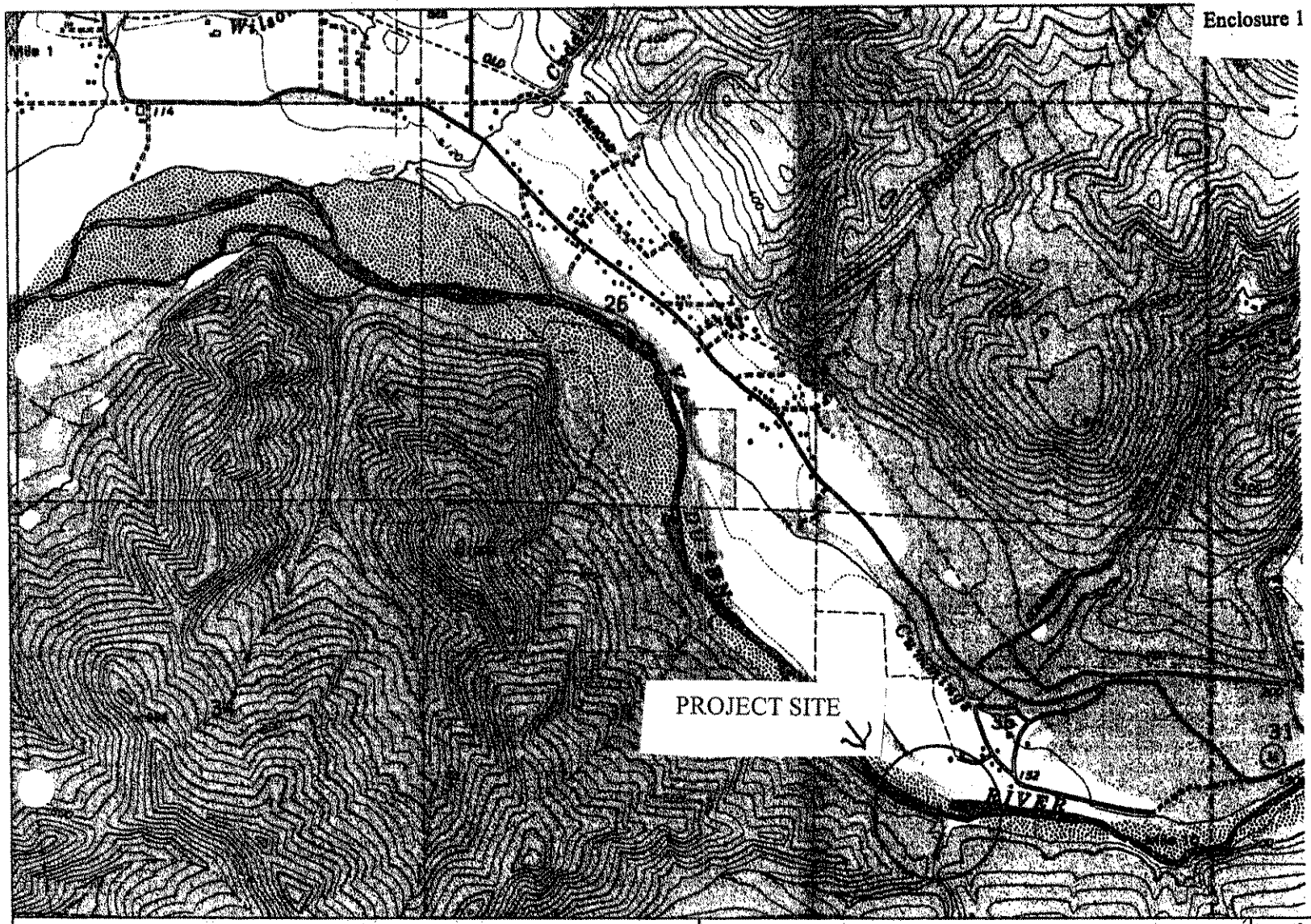

SHEET 1 OF 2

HYDESVILLE 15' QUADRANGLE 1979

TEMPORARY MULTIPURPOSE BRIDGE CROSSING

CUMMINGS CREEK, VAN DUZEN RIVER, HUMBOLDT COUNTY, CALIFORNIA

THE PACIFIC LUMBER COMPANY

P.O. BOX 97 - SCOTIA - CA - 95565 - PH: (707) 764-2222 - FAX: (707) 764-4508

Scale: 1" = 1320'	Drawn: DWD
	Date: 01/11/08
	Rev:
	Drawing Number: SP0808-1414-01

Date: 2-13-08

Enclosure 1 File No. 2003-275650

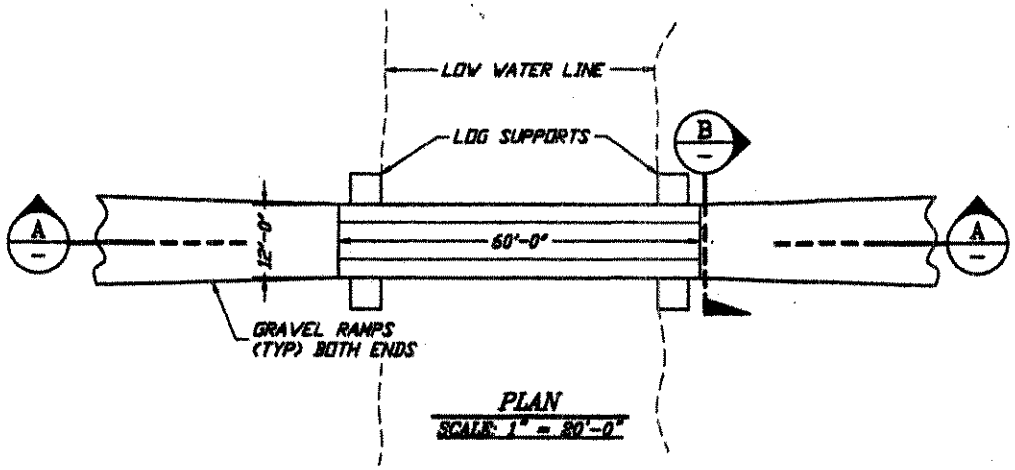

PLAN
SCALE: 1" = 20'-0"

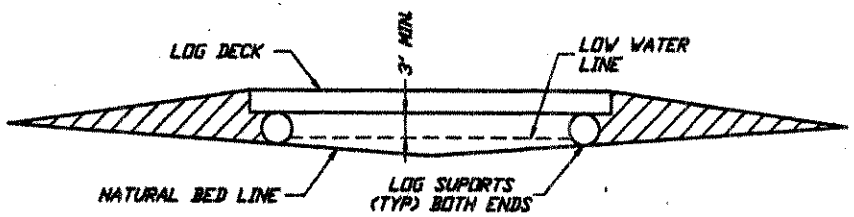

SECTION
SCALE: 1" = 20'-0" A

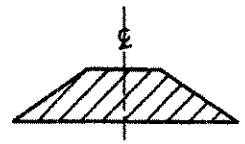

SECTION
SCALE: 1" = 20'-0" B

SHEET 2 OF 2

PLAN & SECTIONS

TEMPORARY MULTIPURPOSE BRIDGE CROSSING

CUMMINGS CREEK, VAN DUZEN RIVER, HUMBOLDT COUNTY, CALIFORNIA

THE PACIFIC LUMBER COMPANY

P.O. BOX 37 ~ SCOTIA ~ CA ~ 95565 ~ PH (707) 764-2222 ~ FAX (707) 764-4508

Drawn DWD.
Date: 01/11/08
Rev.
Drawing Number: SP0808-1414-08

Date: 2-13-08

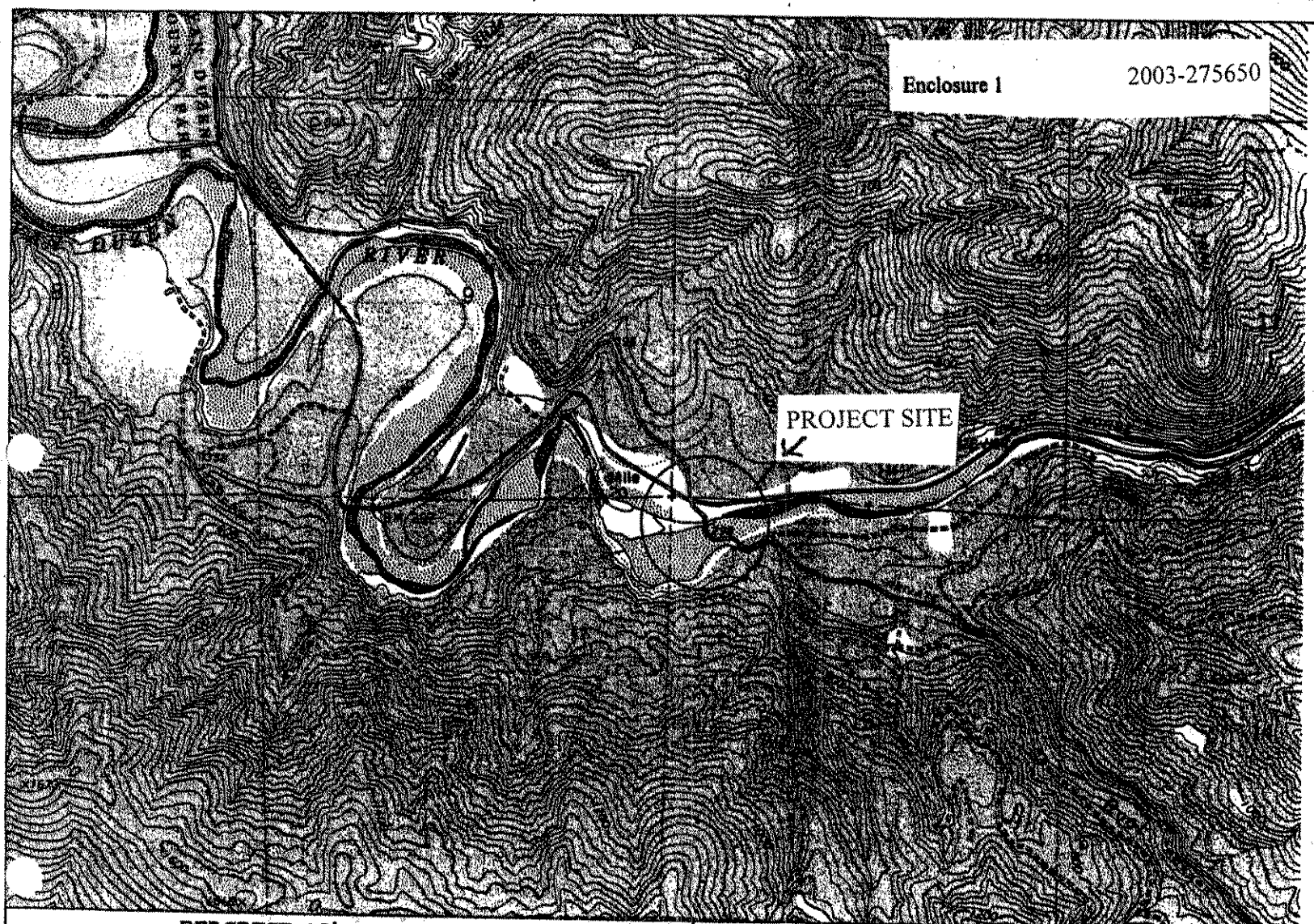

REDCREST 15' QUADRANGLE 1969

TEMPORARY MULTIPURPOSE BRIDGE CROSSING

ROOT CREEK, VAN DUZEN RIVER, HUMBOLDT COUNTY, CALIFORNIA

THE PACIFIC LUMBER COMPANY

P.O. BOX 37 - SCOTIA - CA - 95565 - PH: (707) 764-2222 - FAX: (707) 764-4508

Scale: 1" = 1880'	Drawn: DWD
	Date: 01/07/08
	Rev:
	Drawing Number: BPC508-1412-01

Date: 2-13-08

Sheet 3 of 12

Enclosure 1 2003-275650

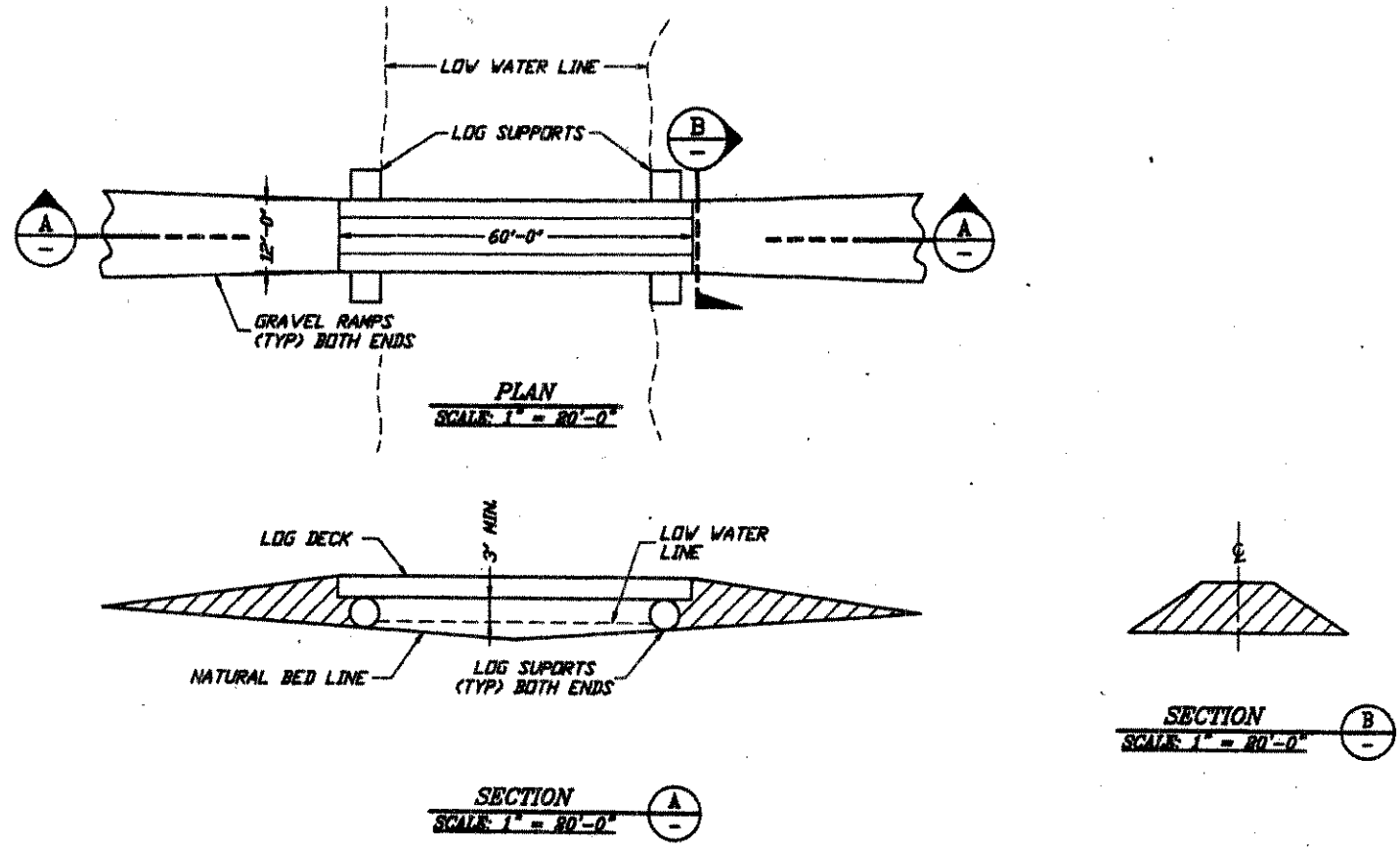

SHEET 3 OF 3

PLAN & SECTIONS

TEMPORARY MULTIPURPOSE BRIDGE CROSSING

ROOT CREEK, VAN DUZEN RIVER, HUMBOLDT COUNTY, CALIFORNIA

THE PACIFIC LUMBER COMPANY

P.O. BOX 37 - SCOTIA - CA - 95565 - PH: (707) 764-2222 - FAX: (707) 764-4508

Drawn: DWD
Date: 01/08/08
Rev:
Drawing Number: EP0808-1412-08

Enclosure 1

2003-275650

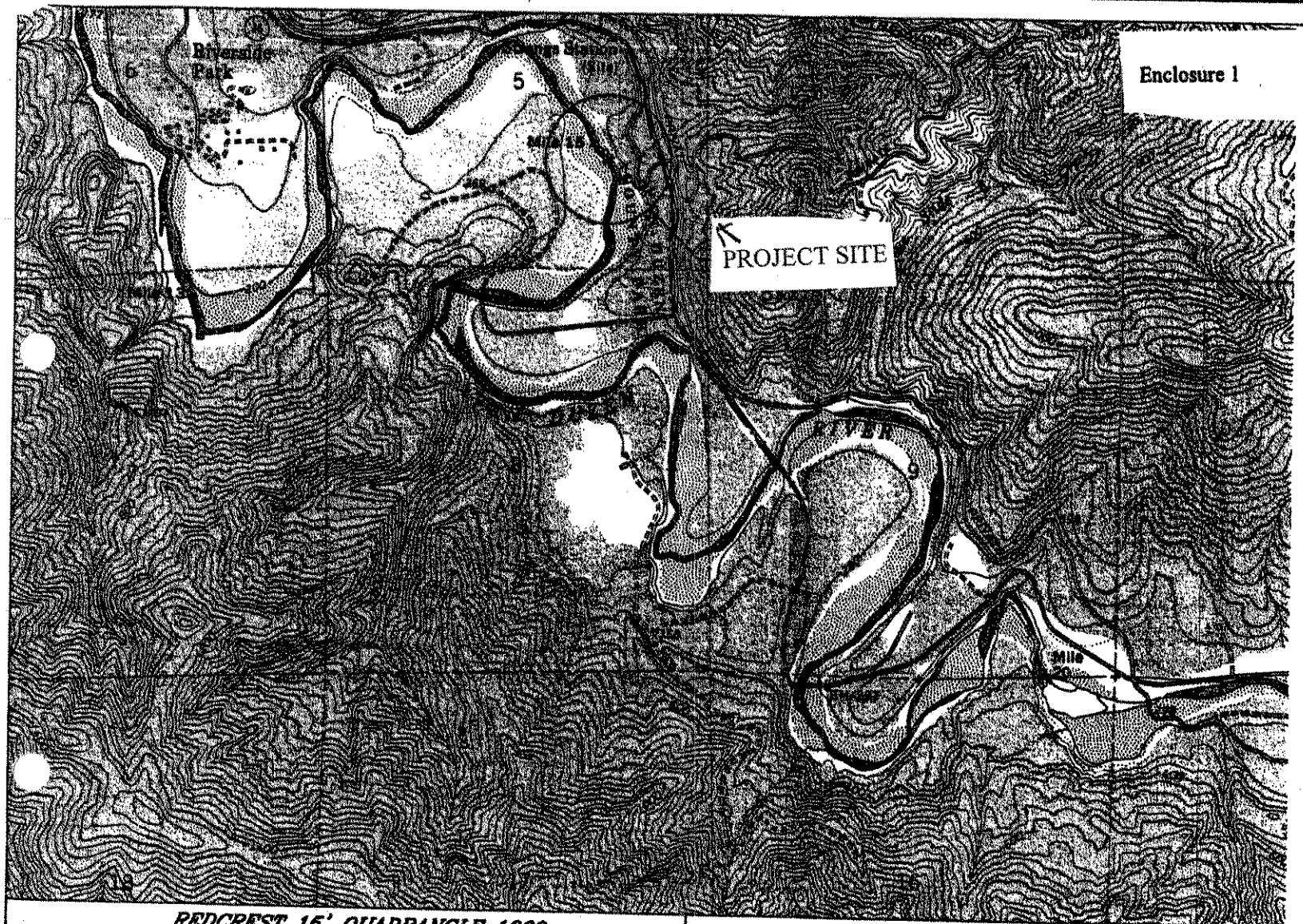

REDCREST 15' QUADRANGLE 1969

TEMPORARY MULTIPURPOSE BRIDGE CROSSING

STRONG'S STATION, VAN DUZEN RIVER, HUMBOLDT COUNTY, CALIFORNIA

THE PACIFIC LUMBER COMPANY

P.O. BOX 37 ~ SCOTIA ~ CA ~ 95565 ~ PH (707) 764-2222 ~ FAX (707) 764-4508

SHEET 1 OF 2

Scale: 1" = 1320'	Drawn: DWD
	Date: 02/11/08
	Rev:
	Drawing Number: BP0804-1412-01

Enclosure 1 File No. 2003-275650

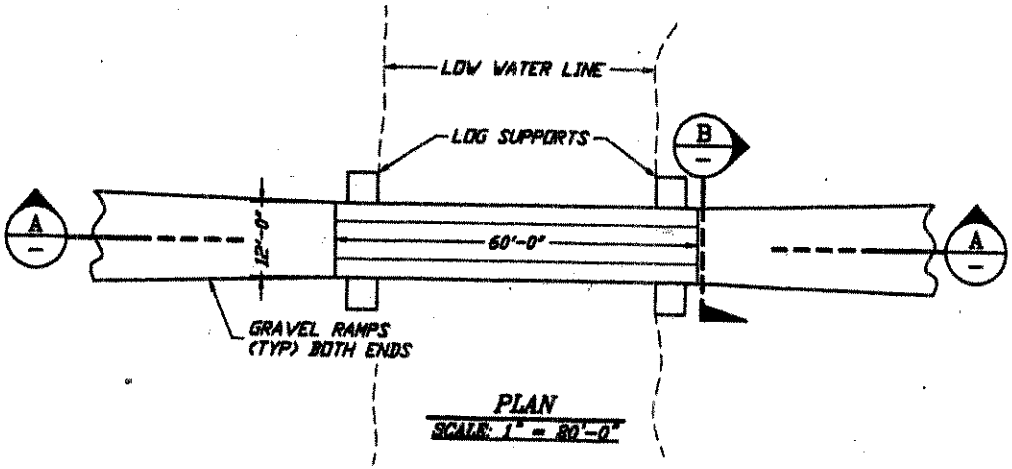

PLAN
SCALE: 1" = 20'-0"

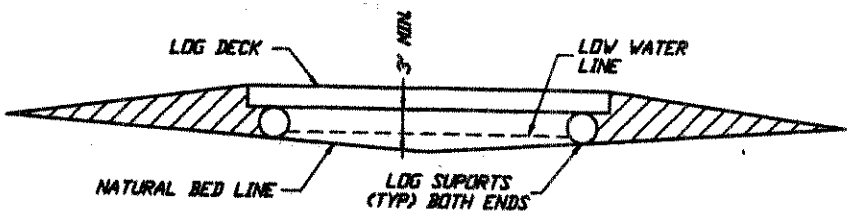

SECTION A
SCALE: 1" = 20'-0"

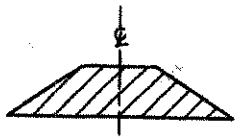

SECTION B
SCALE: 1" = 20'-0"

Sheet 6 of 12

Date: 2-13-08

SHEET 3 OF 3

PLAN & SECTIONS

TEMPORARY MULTIPURPOSE BRIDGE CROSSING

STRONG'S STATION, VAN DUZEN RIVER, HUMBOLDT COUNTY, CALIFORNIA

THE PACIFIC LUMBER COMPANY

P.O. BOX 37 - SCOTIA - CA - 95565 - PH: (707) 764-2222 - FAX: (707) 764-4508

Drawn: DWD
Date: 01/11/08
Rev:
Drawing Number: BP0504-1413-08

Enclosure 1

2003-275650

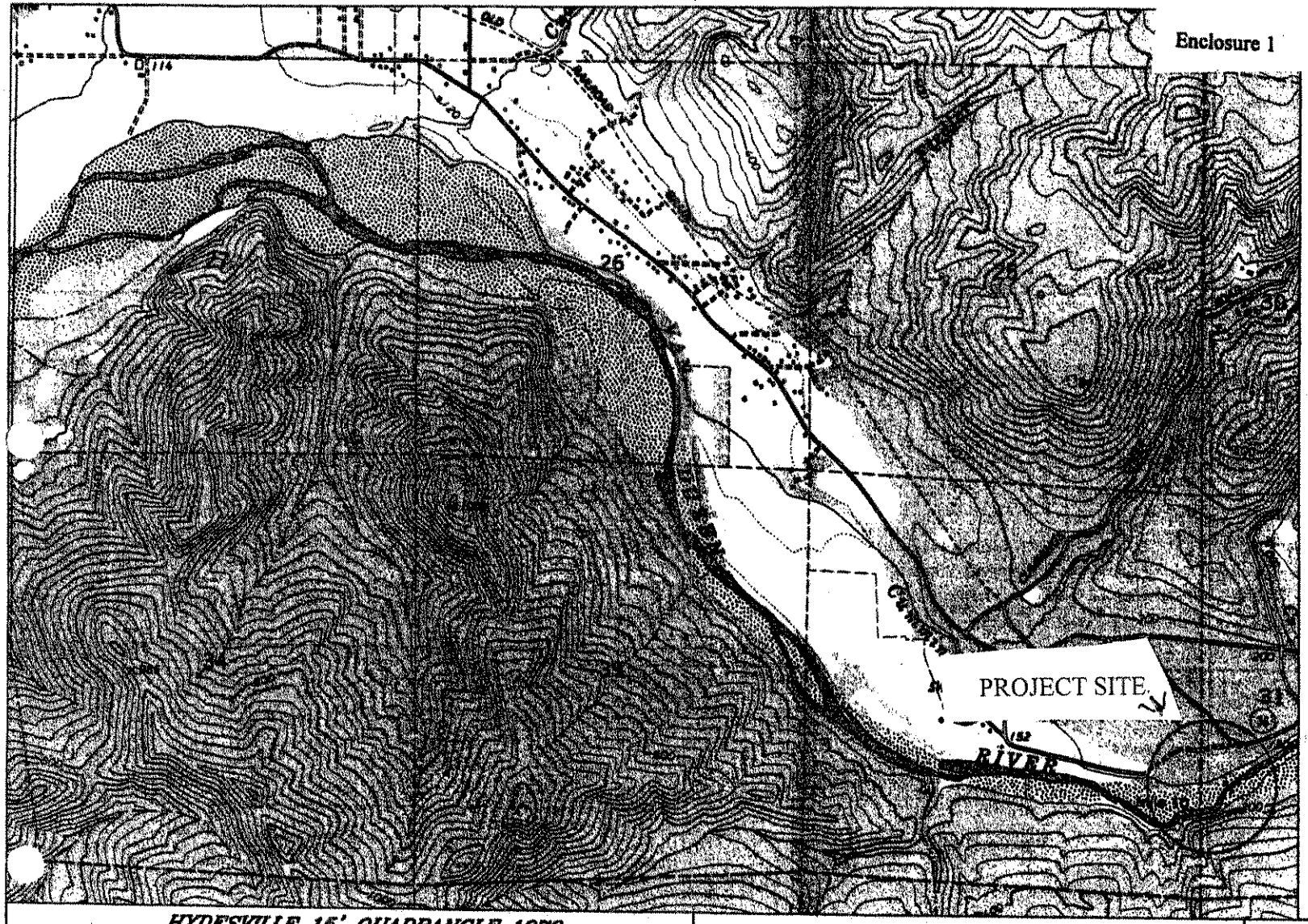

HYDESVILLE 15' QUADRANGLE 1979

TEMPORARY MULTIPURPOSE BRIDGE CROSSING

10-MILE CROSSING, VAN DUZEN RIVER, HUMBOLDT COUNTY, CALIFORNIA

THE PACIFIC LUMBER COMPANY

P.O. BOX 97 ~ SCOTIA ~ CA ~ 95565 ~ PH: (707) 764-2222 ~ FAX: (707) 764-4508

Scale: 1" = 1880'	Drawn: DWD
	Date: 01/18/08
	Rev:
	Drawing Number: BP0808-1418-01

SHEET 1 OF 3

Date: 2-13-08

Enclosure 1 File No. 2003-275650

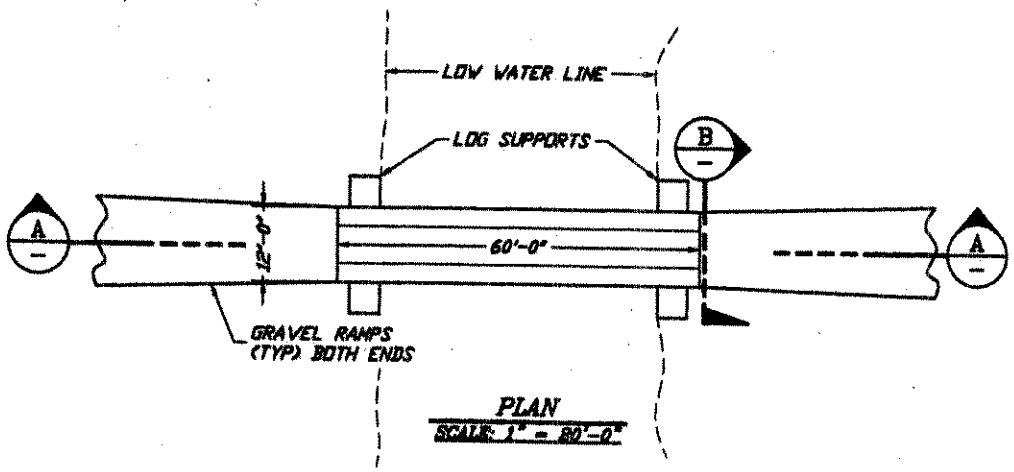

PLAN
SCALE: 1" = 20'-0"

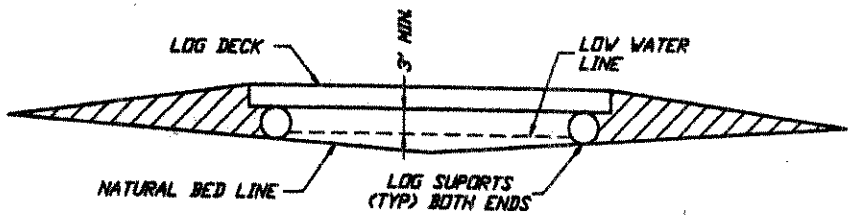

SECTION
SCALE: 1" = 20'-0" A

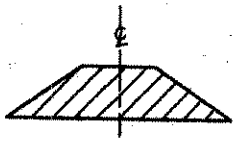

SECTION
SCALE: 1" = 20'-0" B

Date; 2-13-08

Sheet 8 of 12

SHEET 3 OF 3

PLAN & SECTIONS

TEMPORARY MULTIPURPOSE BRIDGE CROSSING
10-MILE CROSSING, VAN DUZEN RIVER, HUMBOLDT COUNTY, CALIFORNIA

THE PACIFIC LUMBER COMPANY

P.O. BOX 97 - SCOTIA - CA - 95565 - PH: (707) 764-2222 - FAX: (707) 764-4308

Drawn	DWD.
Date	01/15/08
Rev	
Drawing Number	BF0808-1415-03

Enclosure 1 File No 2003-275650

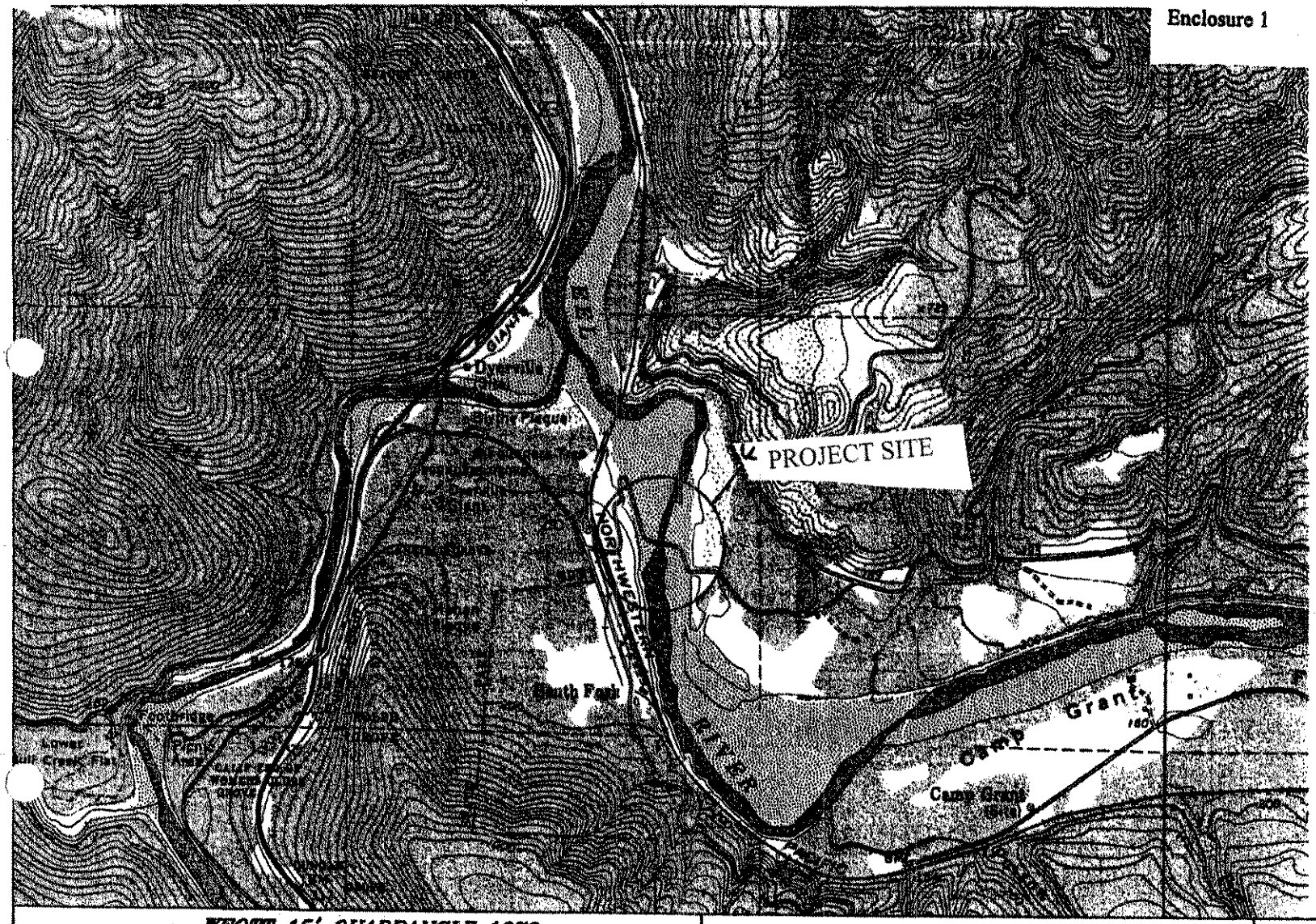

SHEET 1 OF 2

WEOTT 15' QUADRANGLE 1970

TEMPORARY MULTIPURPOSE BRIDGE CROSSING

SOUTH FORK BAR (DYERVILLE), EEL RIVER, HUMBOLDT COUNTY, CALIFORNIA

THE PACIFIC LUMBER COMPANY

P.O. BOX 37 - SCOTIA - CA - 95565 - PH (707) 764-2222 - FAX (707) 764-4508

Scale: 1" = 1880'	Drawn: DWD.
	Date: 01/08/08
	Rev:
	Drawing Number: EP0808-1411-01

Date: 2-13-08

Enclosure 1 File No. 2003-275650

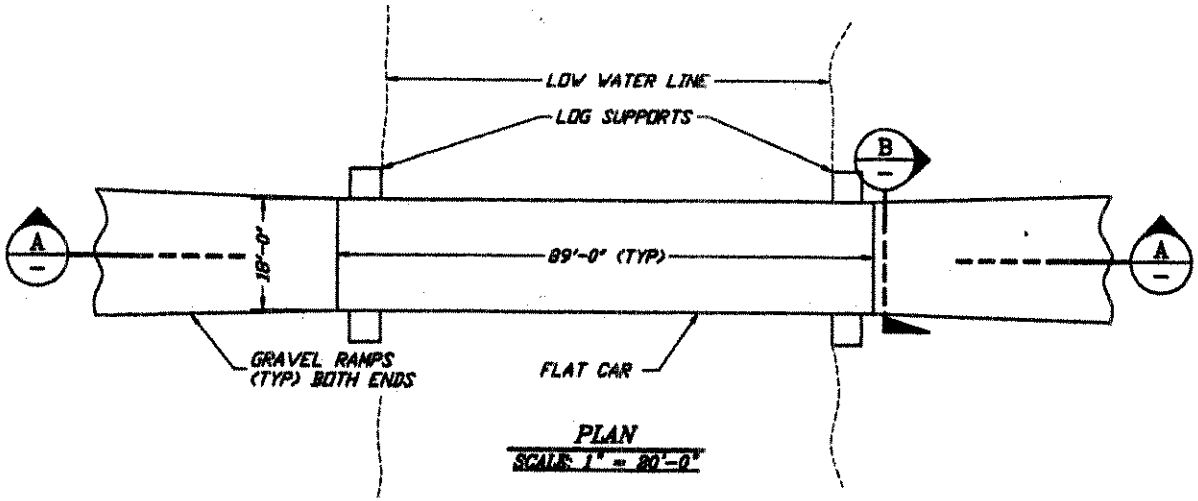

PLAN
SCALE: 1" = 20'-0"

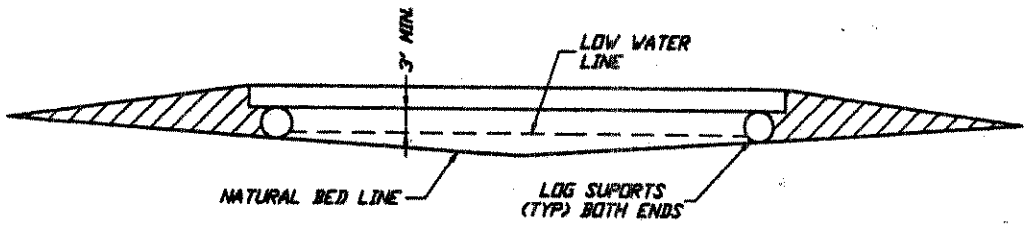

SECTION A
SCALE: 1" = 20'-0"

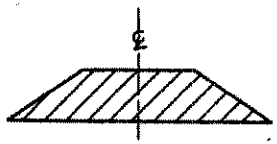

SECTION B
SCALE: 1" = 20'-0"

SHEET 9 OF 9

PLAN & SECTIONS TEMPORARY MULTIPURPOSE BRIDGE CROSSING SOUTH FORK BAR (DYERVILLE), EEL RIVER, HUMBOLDT COUNTY, CALIFORNIA	THE PACIFIC LUMBER COMPANY P.O. BOX 37 ~ SCOTIA ~ CA ~ 95565 ~ PH: (707) 764-2222 ~ FAX: (707) 764-4508	Drawn: DWD Date: 01/07/08 Rev: Drawing Number: EP0308-1411-08

Enclosure 1 File No. 2003-275650

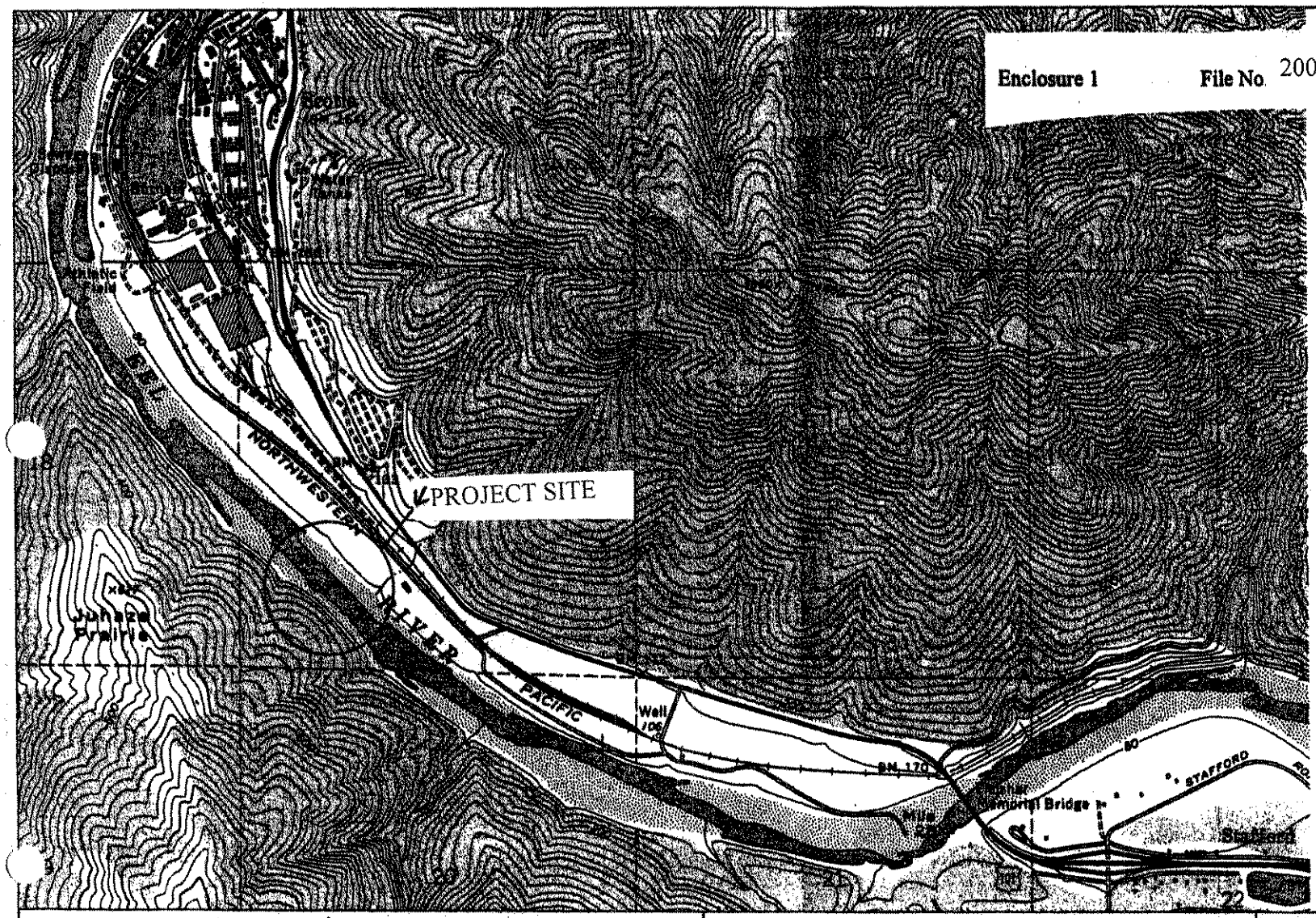

SHEET 1 OF 3

SCOTIA 15' QUADRANGLE 1970

TEMPORARY MULTIPURPOSE BRIDGE CROSSING

TRUCK SHOP BAR, EEL RIVER, HUMBOLDT COUNTY, CALIFORNIA

THE PACIFIC LUMBER COMPANY

P.O. BOX 97 - SCOTIA - CA - 95565 - PH (707) 764-2222 - FAX (707) 764-4508

Scale: 1" = 1880'	Drawn: DWD
	Date: 12/27/03
	Rev:
	Drawing Number: BP0001-1410-01

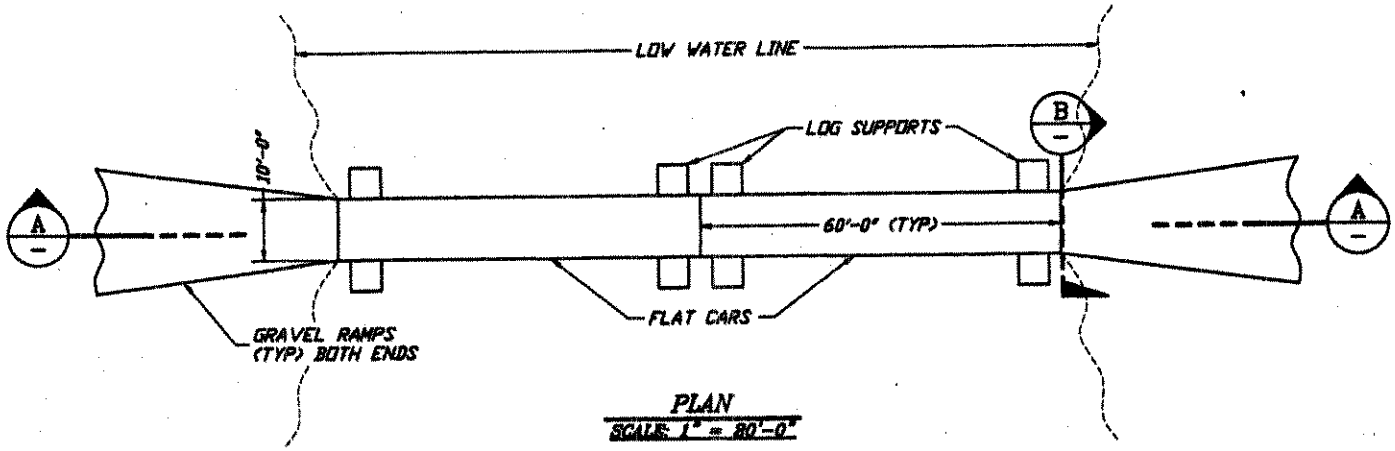

PLAN
SCALE: 1" = 20'-0"

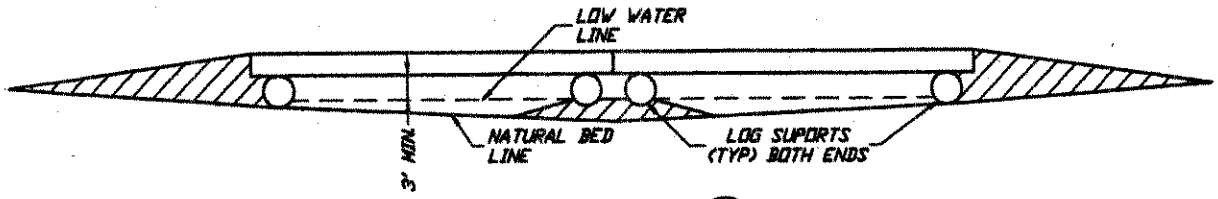

SECTION A
SCALE: 1" = 20'-0"

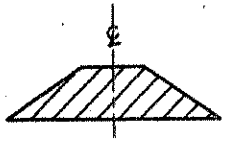

SECTION B
SCALE: 1" = 20'-0"

SHEET 2 OF 2

PLAN & SECTIONS

TEMPORARY MULTIPURPOSE BRIDGE CROSSING
TRUCK SHOP BAR, EEL RIVER, HUMBOLDT COUNTY, CALIFORNIA

THE PACIFIC LUMBER COMPANY

P.O. BOX 37 ~ SCOTIA ~ CA ~ 95565 ~ PH (707) 764-2222 ~ FAX (707) 764-4908

Drawn: DWD.
Date: 12/07/08
Rev:
Drawing Number: EP0802-1410-08