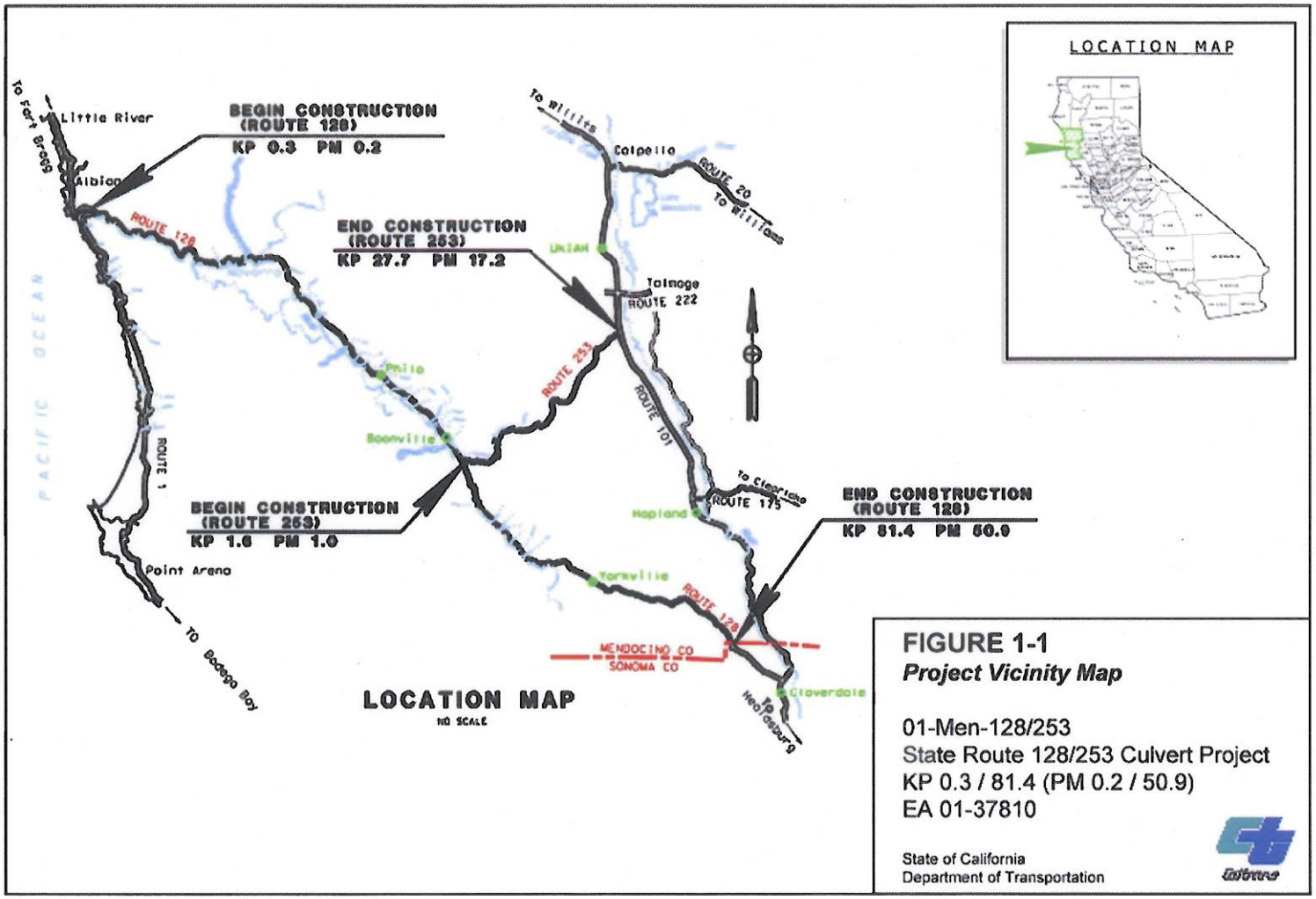

FIGURE 1-1
Project Vicinity Map

01-Men-128/253
State Route 128/253 Culvert Project
KP 0.3 / 81.4 (PM 0.2 / 50.9)
EA 01-37810

State of California
Department of Transportation

Figure 1. Project Location Map

Dist	COUNTY	ROUTE	POST MILES TOTAL PROJECT	SHEET No.	TOTAL SHEETS
01	Men	128	Var		

REGISTERED CIVIL ENGINEER DATE

PLANS APPROVAL DATE

REGISTERED PROFESSIONAL ENGINEER No. Exp. CIVIL STATE OF CALIFORNIA

THE STATE OF CALIFORNIA OR ITS OFFICERS OR AGENTS SHALL NOT BE RESPONSIBLE FOR THE ACCURACY OR COMPLETENESS OF SCANNED COPIES OF THIS PLAN SHEET.

NOTE:

1. EXACT LOCATION OF THE PLASTIC PIPE TO BE DETERMINED IN THE FIELD BY THE ENGINEER.
2. GRAVEL FILLED BAG ANCHORS TO BE PLACED AT INTERMEDIATE LOCATIONS AS DETERMINED BY THE ENGINEER.
3. USE FLEXIBLE PIPE WITH WATER TIGHT JOINTS AS NECESSARY TO FOLLOW CREEK ALIGNMENT.
4. TEMPORARY DAM CAN BE CONSTRUCTED AS TYPE 1 OR TYPE 2.
5. IF VELOCITIES ARE GREATER THAN 6 ft/s, A ROCK ENERGY DISSAPATOR SHALL BE PLACED AT THE OUTFALL OF THE PLASTIC PIPE.
6. METHOD OF ATTACHING TEMPORARY PLASTIC PIPE TO EXISTING CSP CULVERT WALL OR RCB CULVERT WALL TO BE APPROVED BY THE ENGINEER.
7. AT PM 21.80, TEMPORARY CREEK DIVERSION SYSTEM IS INCLUDED IN THE PRICE FOR JACKED 60" WELDED STEEL PIPE.
8. ANY ADDITIONAL LOCATIONS NEEDING TEMPORARY CREEK DIVERSIONS ARE INCLUDED IN THE LUMP SUM PRICE FOR TEMPORARY CREEK DIVERSION SYSTEM.

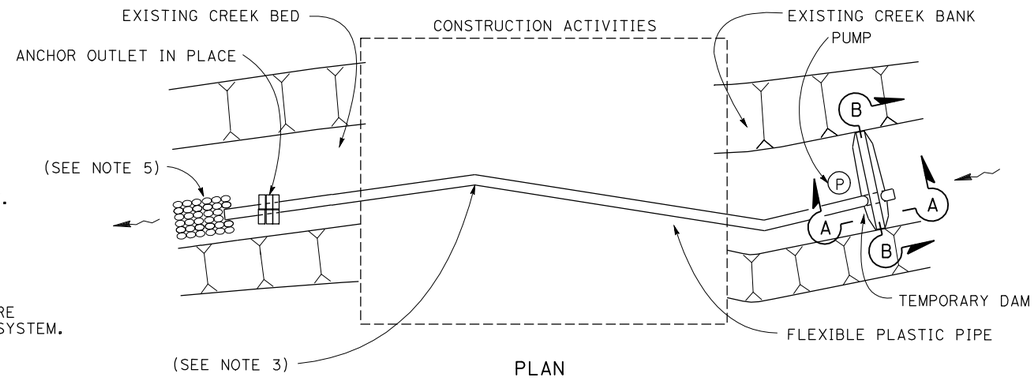

PLAN

TEMPORARY CREEK DIVERSION SYSTEM

HYDROLOGIC SUMMARY

CONSTRUCTION WINDOW	PIPE Dia.
JUN 15 - OCT 15	12" *

* THIS VALUE WILL VARY DEPENDING ON WATER YEAR.

DRAINAGE SYSTEM No.	LOCATION PM
23	20.15
31	27.54
44	36.63
48	39.88

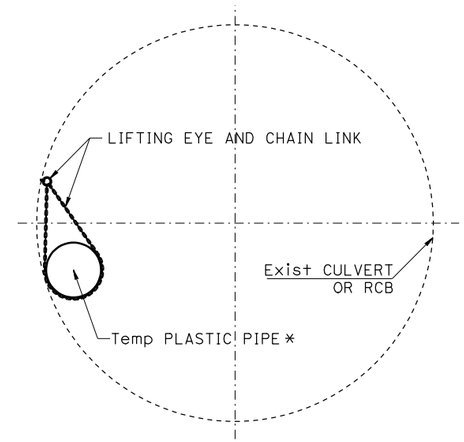

TYPICAL SECTION

Temp PLASTIC PIPE INSTALLED IN CSP/RCB

DRAINAGE SYSTEM No.	LOCATION PM
23	20.15
31	27.54
44	36.63
48	39.88

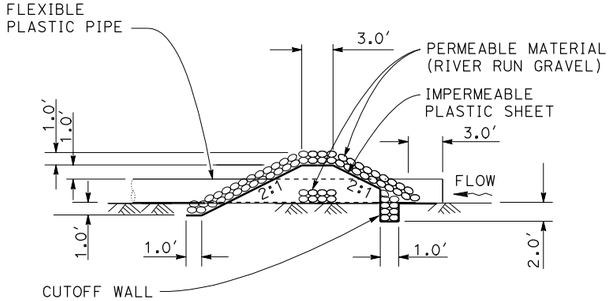

TEMPORARY DAM (TYPE 1)
SECTION A-A

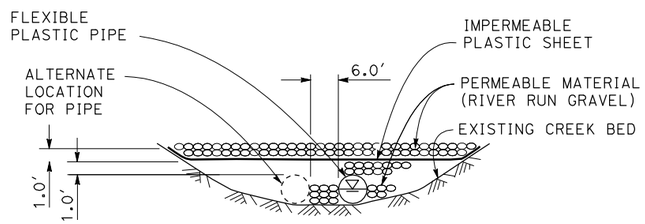

TEMPORARY DAM (TYPE 1)
SECTION B-B

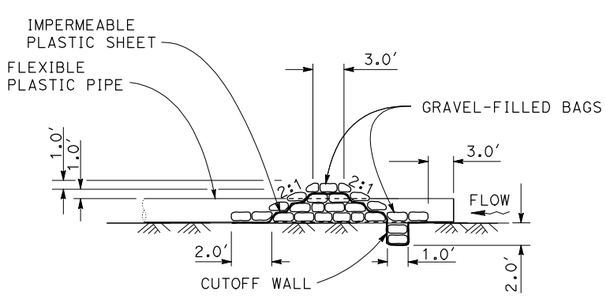

TEMPORARY DAM (TYPE 2)
SECTION A-A

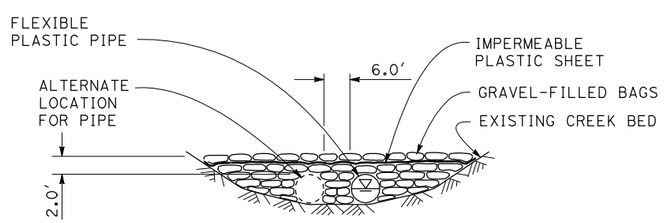

TEMPORARY DAM (TYPE 2)
SECTION B-B

THIS PLAN ACCURATE FOR TEMPORARY WATER POLLUTION CONTROL WORK ONLY

TEMPORARY WATER POLUTION CONTROL DETAILS
(TEMPORARY CREEK DIVERSION SYSTEM)

NO SCALE

TYPICAL STREAM DIVERSION

STATE OF CALIFORNIA - DEPARTMENT OF TRANSPORTATION
Caltrans® DIVISION OF ENGINEERING

FUNCTIONAL SUPERVISOR

CALCULATED-DESIGNED BY | CHECKED BY

REVISED BY | DATE REVISED

LAST REVISION 03-30-11 | DATE PLOTTED => 25-JAN-2012 | TIME PLOTTED => 14:34

Dist	COUNTY	ROUTE	POST MILES TOTAL PROJECT	SHEET No.	TOTAL SHEETS
01	Men	128	Var		

REGISTERED CIVIL ENGINEER DATE

PLANS APPROVAL DATE

REGISTERED PROFESSIONAL ENGINEER No. Exp. CIVIL STATE OF CALIFORNIA

THE STATE OF CALIFORNIA OR ITS OFFICERS OR AGENTS SHALL NOT BE RESPONSIBLE FOR THE ACCURACY OR COMPLETENESS OF SCANNED COPIES OF THIS PLAN SHEET.

NOTES:

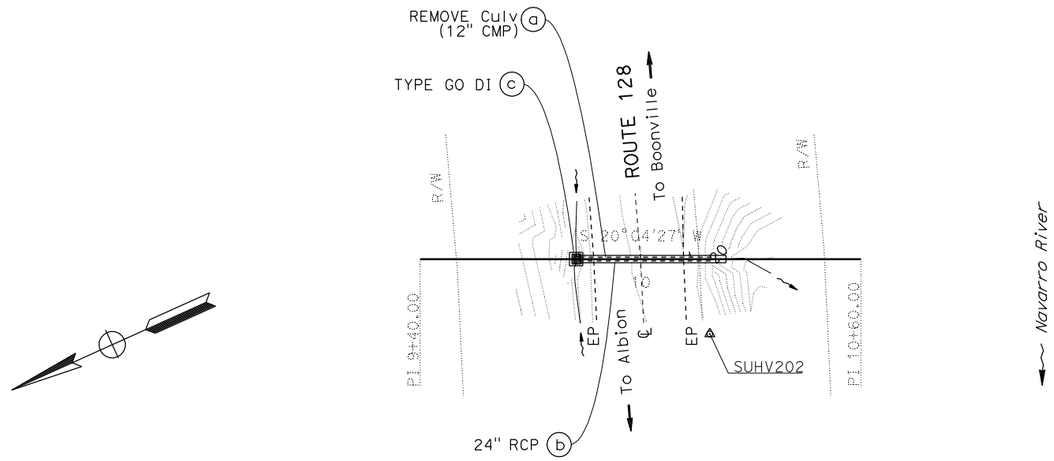

DRAINAGE SYSTEM No. 5

ROUTE 128
PM 00.59

PLAN

SCALE: 1" = 20'

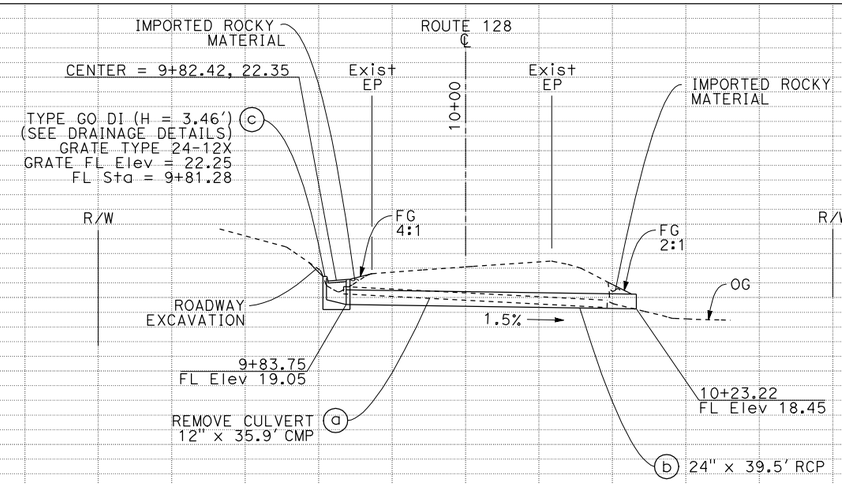

PROFILE

SCALE: 1" = 10'

DRAINAGE PLAN AND PROFILE

SCALE AS SHOWN

TYPICAL CULVERT REPLACEMENT

STATION		+20	+40	+60	+80	10+00	+20	+40	+60	+80	TOTAL
CY	Exc										
	Emb										

REVISED BY | DATE REVISED

CALCULATED-DESIGNED BY | CHECKED BY

FUNCTIONAL SUPERVISOR

STATE OF CALIFORNIA - DEPARTMENT OF TRANSPORTATION

03-DESIGN

Caltrans

LAST REVISION | DATE PLOTTED => 25-JAN-2012 | TIME PLOTTED => 14:51

Dist	COUNTY	ROUTE	POST MILES TOTAL PROJECT	SHEET No.	TOTAL SHEETS
01	Men	128	Var		

REGISTERED CIVIL ENGINEER DATE

PLANS APPROVAL DATE

REGISTERED PROFESSIONAL ENGINEER No. Exp. CIVIL STATE OF CALIFORNIA

THE STATE OF CALIFORNIA OR ITS OFFICERS OR AGENTS SHALL NOT BE RESPONSIBLE FOR THE ACCURACY OR COMPLETENESS OF SCANNED COPIES OF THIS PLAN SHEET.

T15N R15W MDB&M
SECTION 33

NOTES:

1. FOR ACCURATE RIGHT OF WAY DATA, CONTACT RIGHT OF WAY ENGINEERING AT THE DISTRICT OFFICE.
2. THIS PLAN ACCURATE FOR DRAINAGE WORK ONLY.
3. FOR ROCK SLOPE PROTECTION DETAILS SEE DRAINAGE DETAILS SHEETS.
4. INLET STRUCTURE SKEW ANGLE IS MEASURED FROM A LINE PERPENDICULAR TO THE CULVERT ALIGNMENT.

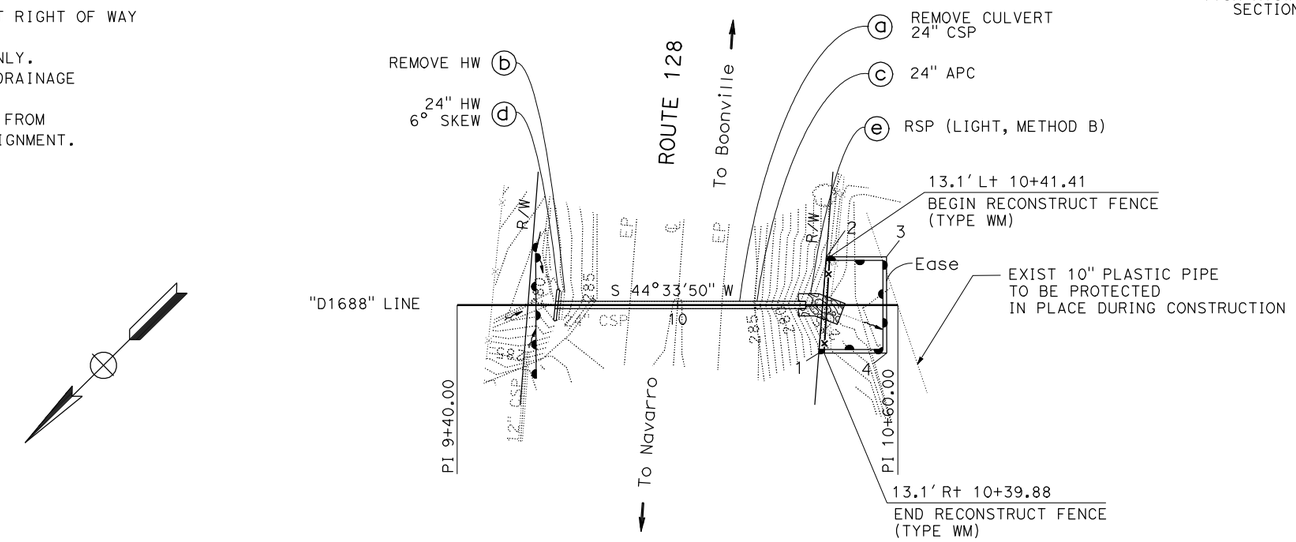

POINT	STATION	OFFSET
1	10+38.48	13.12' R+
2	10+40.54	13.13' L+
3	10+56.94	13.13' L+
4	10+56.94	13.12' R+

DRAINAGE SYSTEM (12)
ROUTE 128
PM 16.88
SCALE: 1" = 20'

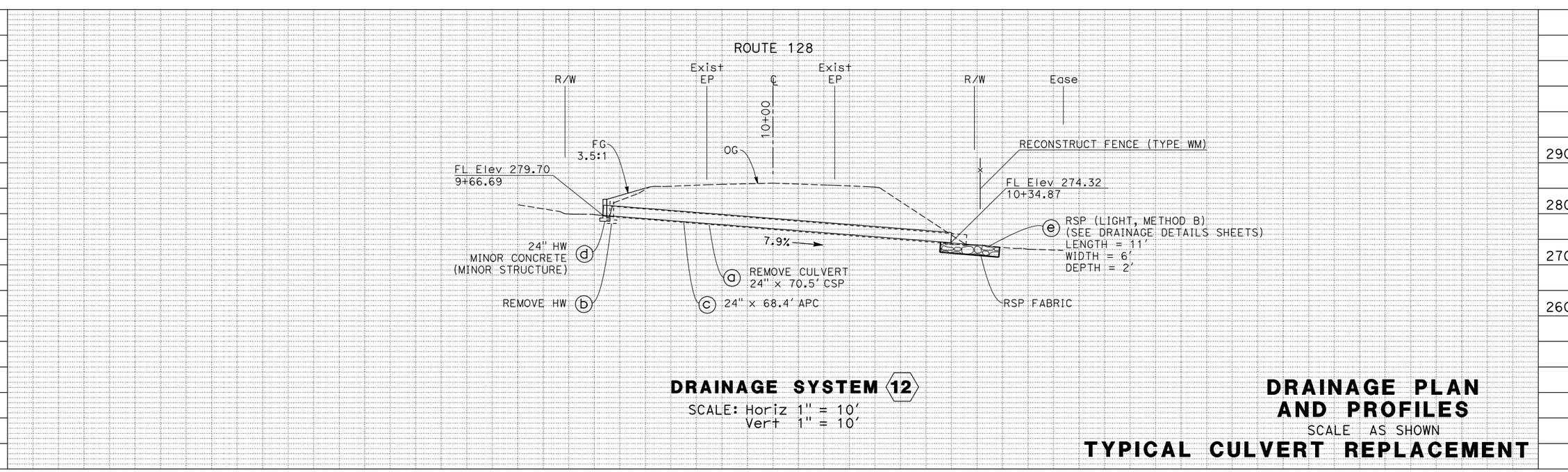

DRAINAGE SYSTEM (12)
SCALE: Horiz 1" = 10'
Vert 1" = 10'

DRAINAGE PLAN AND PROFILES
SCALE AS SHOWN
TYPICAL CULVERT REPLACEMENT

REVISED BY | DATE REVISED
CALCULATED-DESIGNED BY | CHECKED BY
FUNCTIONAL SUPERVISOR

STATE OF CALIFORNIA - DEPARTMENT OF TRANSPORTATION
Caltrans® DIVISION OF ENGINEERING

LAST REVISION 03-30-11
DATE PLOTTED => 25-JAN-2012
TIME PLOTTED => 14:39

Dist	COUNTY	ROUTE	POST MILES TOTAL PROJECT	SHEET No.	TOTAL SHEETS
01	Men	128,253	Var		

REGISTERED CIVIL ENGINEER DATE

PLANS APPROVAL DATE

REGISTERED PROFESSIONAL ENGINEER No. Exp. CIVIL STATE OF CALIFORNIA

THE STATE OF CALIFORNIA OR ITS OFFICERS OR AGENTS SHALL NOT BE RESPONSIBLE FOR THE ACCURACY OR COMPLETENESS OF SCANNED COPIES OF THIS PLAN SHEET.

NOTES:

1. FOR COMPLETE RIGHT OF WAY DATA, SEE RIGHT OF WAY RECORD MAPS AT DISTRICT OFFICE.
2. THIS PLAN ACCURATE FOR DRAINAGE WORK ONLY.
3. FOR ROCK SLOPE PROTECTION DETAILS SEE DRAINAGE DETAIL SHEETS.

POINT	STATION	OFFSET
1	9+55.81	12.33′ R+
2	9+56.48	12.68′ L+
3	9+77.87	12.11′ L+

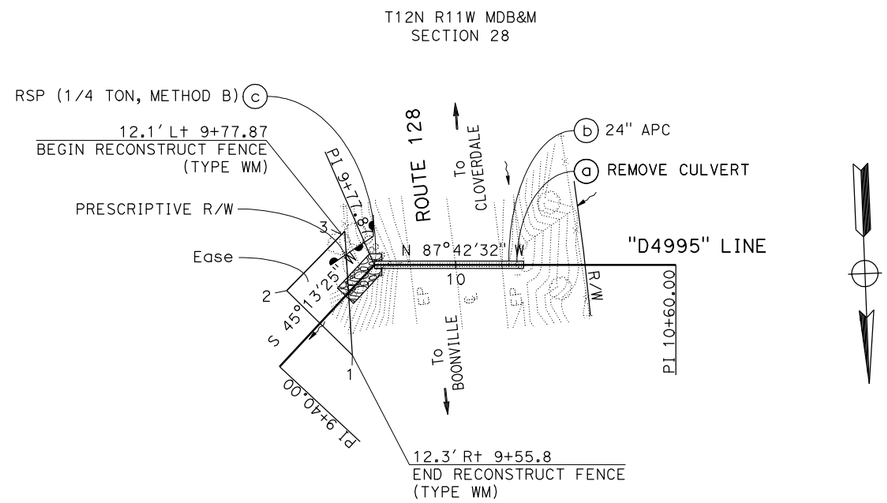

DRAINAGE SYSTEM 6

ROUTE 128
PM 49.95
PLAN SCALE: 1" = 20′

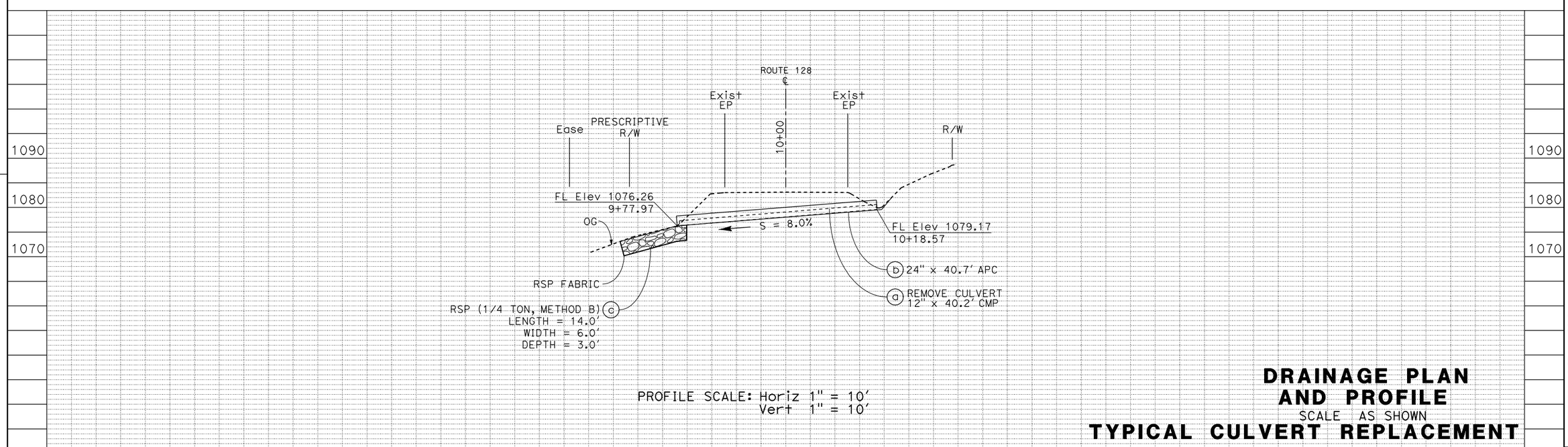

DRAINAGE PLAN AND PROFILE

SCALE AS SHOWN

TYPICAL CULVERT REPLACEMENT

REVISED BY | DATE REVISED

CALCULATED-DESIGNED BY | CHECKED BY

FUNCTIONAL SUPERVISOR

STATE OF CALIFORNIA - DEPARTMENT OF TRANSPORTATION

Caltrans 03-DESIGN

LAST REVISION 03-25-11 | DATE PLOTTED => 25-JAN-2012 | TIME PLOTTED => 14:54

BORDER LAST REVISED 7/2/2010 | USERNAME => s116824 | DGN FILE => 0100000132ia006 EA 37814.rcd | RELATIVE BORDER SCALE IS IN INCHES 0 1 2 3 | UNIT 0306 | PROJECT NUMBER & PHASE 01000001321