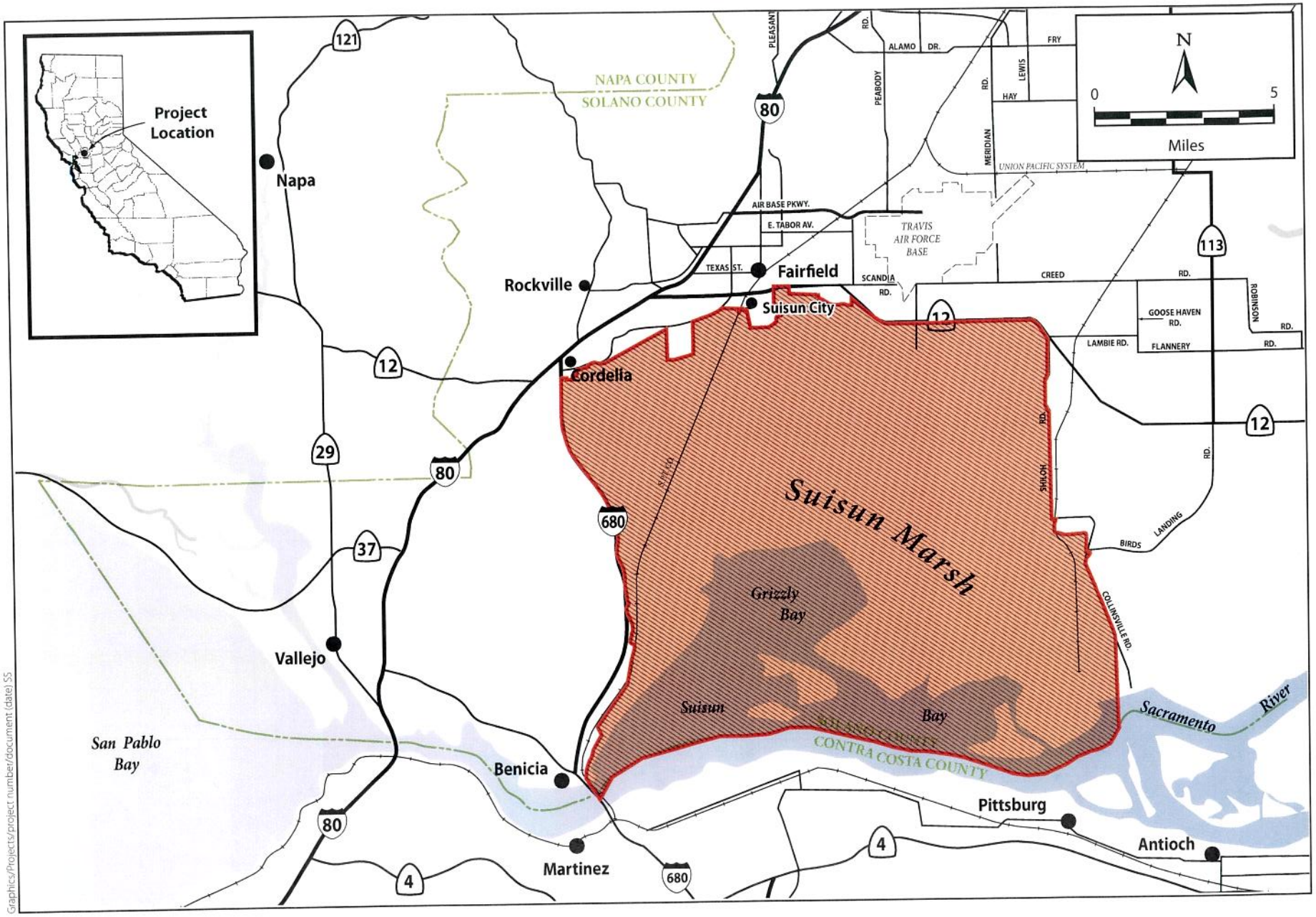

Graphics/Projects/project number/document (date) SS

ICF INTERNATIONAL

Project Location

Figure 1

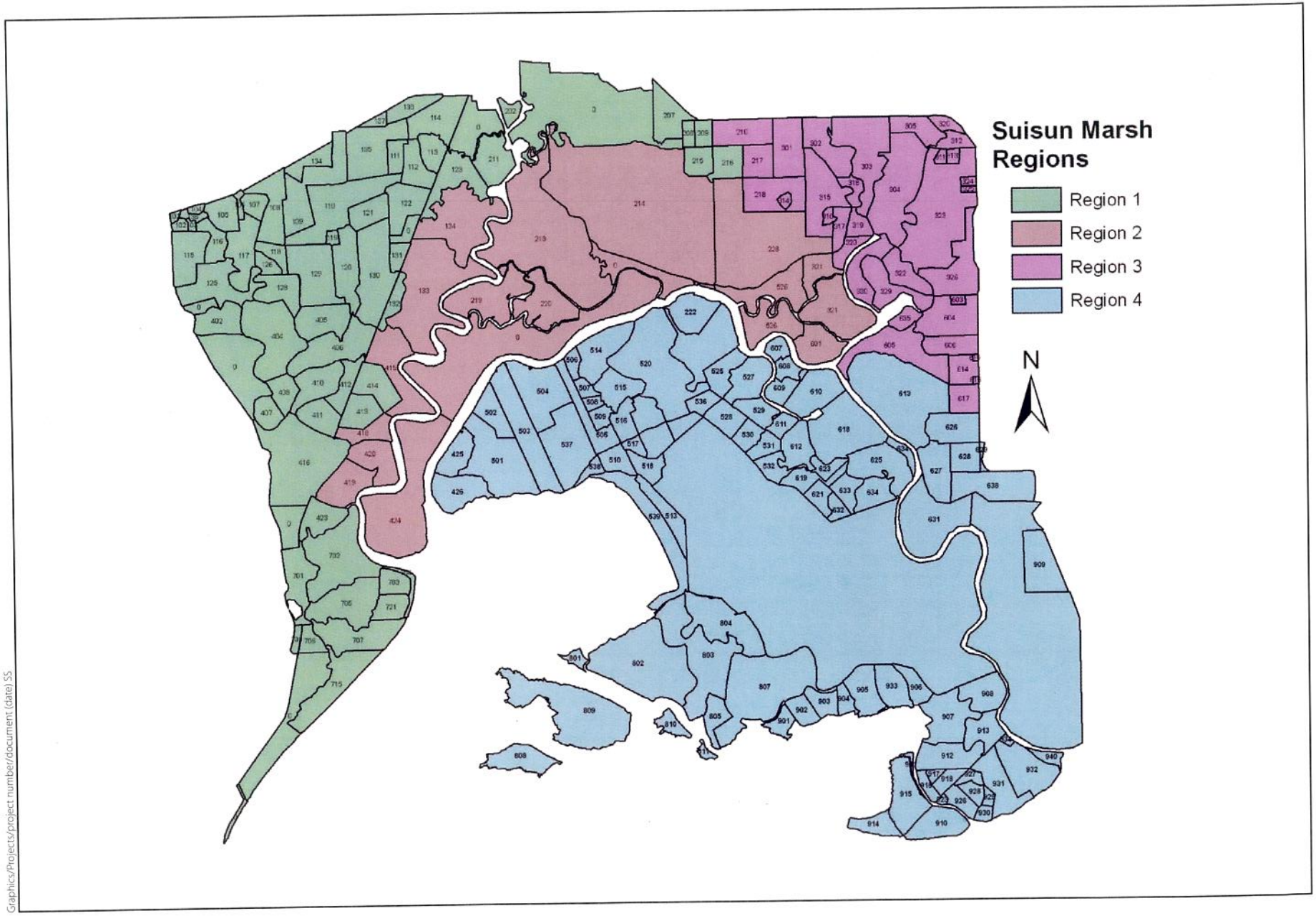

Graphics/Projects/project number/document (date) SS

ICF INTERNATIONAL

Suisun Marsh Regions

Figure 2

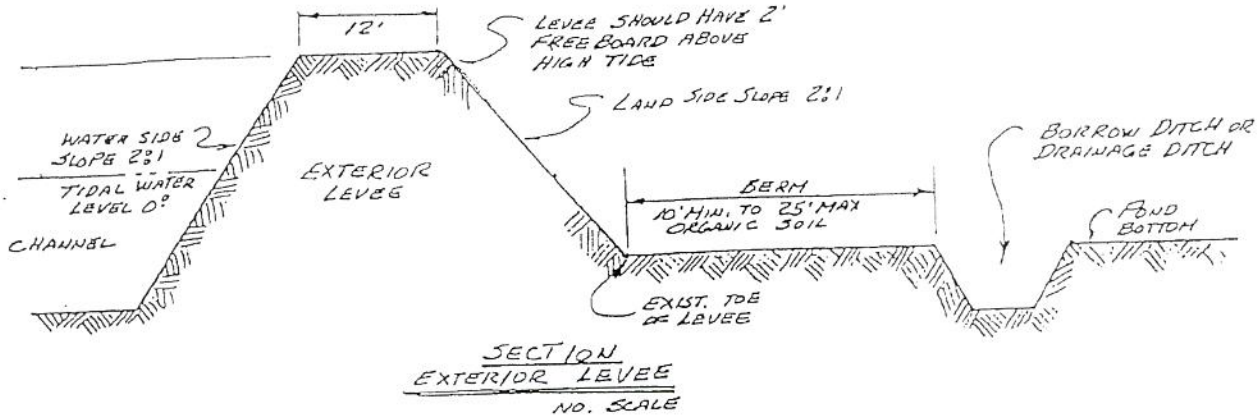

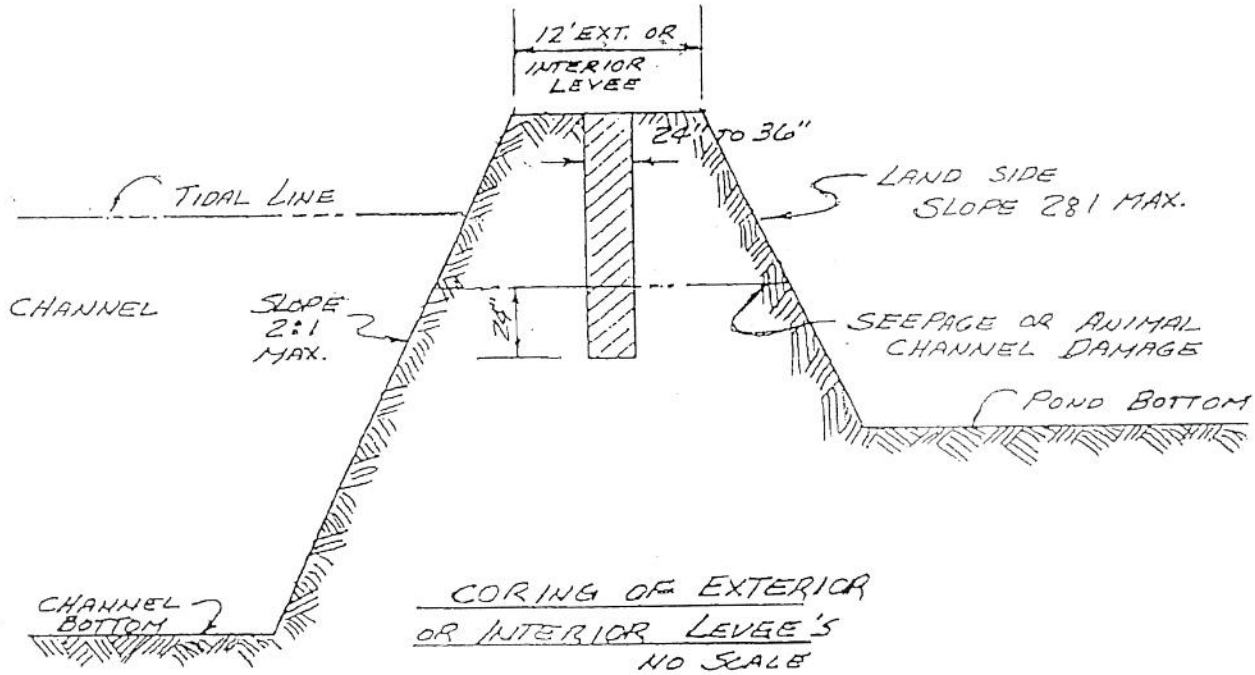

PURPOSE: CONDUCTING ANNUAL WETLANDS MAINTENCE ACTIVITIES TO PROTECT AND ENHANCE SUISUN MARSH MANAGED WETLANDS. DATUM: MLLW PROPERTY OWNERS: 1. Suisun Resource Conservation District Private Landowners 2. California Department of Fish & Game	TYPICAL CROSS SECTIONS No Scale SUISUN RESOURCE CONSERVATION DISTRICT 2544 GRIZZLY ISLAND RD. SUISUN, CA 94585 CALIFORNIA DEPARTMENT OF FISH &GAME 2548 GRIZZLY ISLAND RD. SUISUN, CA 94585	IN: SUISUN MARSH NEAR FAIRFIELD AT: INDIVIDUALLY OWNED STATE AND PRIVATE PROPERTIES COUNTY OF: SOLANO STATE: CA APPLICATION BY: 1) SUISUN RESOURCE CONSERVATION DISTRICT 2) CA. DEPT. FISH & GAME DATE 5/18/12

Figure 3a

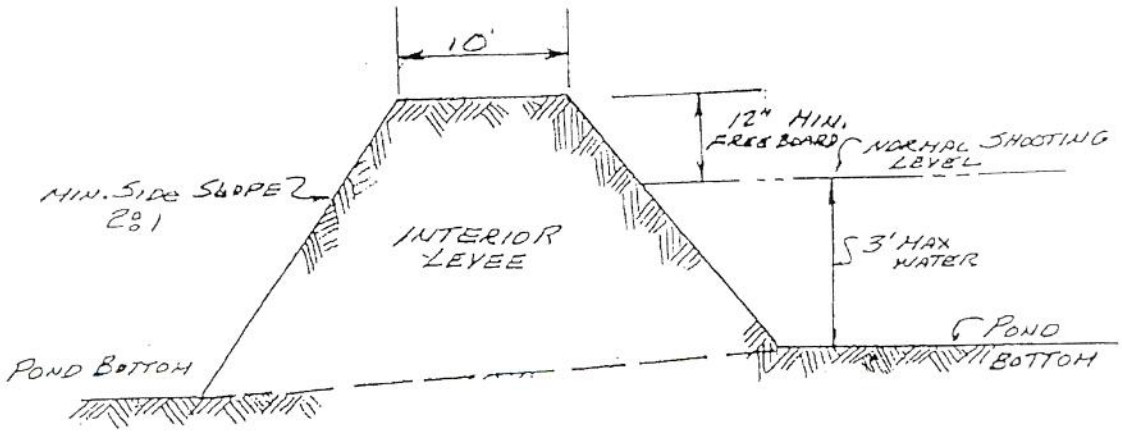

SECTION
INTERIOR LEVEE
NO SCALE

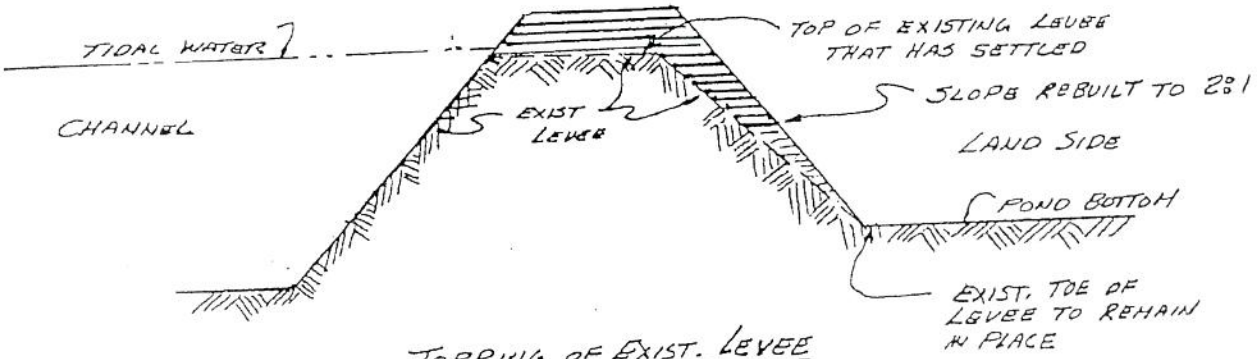

TOPPING OF EXIST. LEVEE
AND REPAIRING SIDE SLOPES
NO SCALE
WITH SETTLEMENT & EROISION

PURPOSE: CONDUCTING ANNUAL WETLANDS MAINTENCE ACTIVITIES TO PROTECT AND ENHANCE SUISUN MARSH MANAGED WETLANDS. DATUM: MLLW PROPERTY OWNERS: 1. Suisun Resource Conservation District Private Landowners 2. California Department of Fish & Game	TYPICAL CROSS SECTIONS No Scale SUISUN RESOURCE CONSERVATION DISTRICT 2544 GRIZZLY ISLAND RD. SUISUN, CA 94585 CALIFORNIA DEPARTMENT OF FISH &GAME 2548 GRIZZLY ISLAND RD. SUISUN, CA 94585	IN: SUISUN MARSH NEAR FAIRFIELD AT: INDIVIDUALLY OWNED STATE AND PRIVATE PROPERTIES COUNTY OF: SOLANO STATE: CA APPLICATION BY: 1) SUISUN RESOURCE CONSERVATION DISTRICT 2) CA. DEPT. FISH & GAME SHEET OF DATE 5/18/12

Figure 3b

Cross Section of Primary Ditch

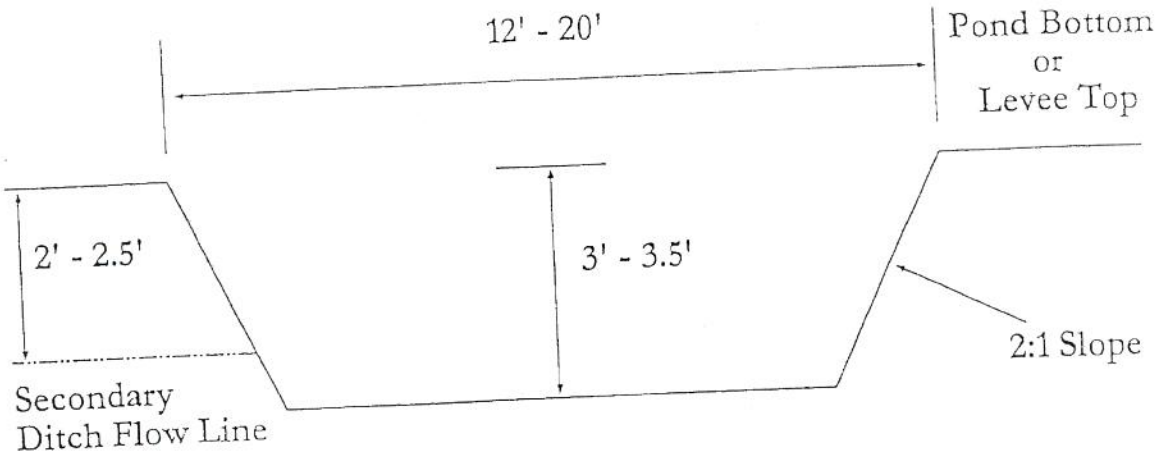

Cross Section of Secondary Ditch

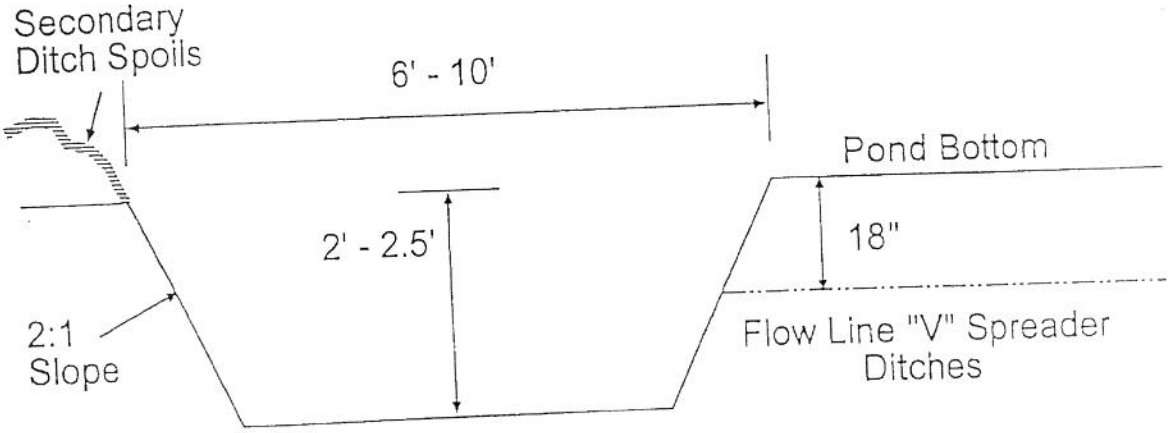

PURPOSE: CONDUCTING ANNUAL WETLANDS MAINTENCE ACTIVITIES TO PROTECT AND ENHANCE SUISUN MARSH MANAGED WETLANDS. DATUM: MLLW PROPERTY OWNERS: 1. Suisun Resource Conservation District Private Landowners 2. California Department of Fish & Game	TYPICAL CROSS SECTIONS No Scale SUISUN RESOURCE CONSERVATION DISTRICT 2544 GRIZZLY ISLAND RD. SUISUN, CA 94585 CALIFORNIA DEPARTMENT OF FISH &GAME 2548 GRIZZLY ISLAND RD. SUISUN, CA 94585	IN: SUISUN MARSH NEAR FAIRFIELD AT: INDIVIDUALLY OWNED STATE AND PRIVATE PROPERTIES COUNTY OF: SOLANO STATE: CA APPLICATION BY: 1) SUISUN RESOURCE CONSERVATION DISTRICT 2) CA. DEPT. FISH & GAME SHEET OF DATE 5/18/12

Figure 4

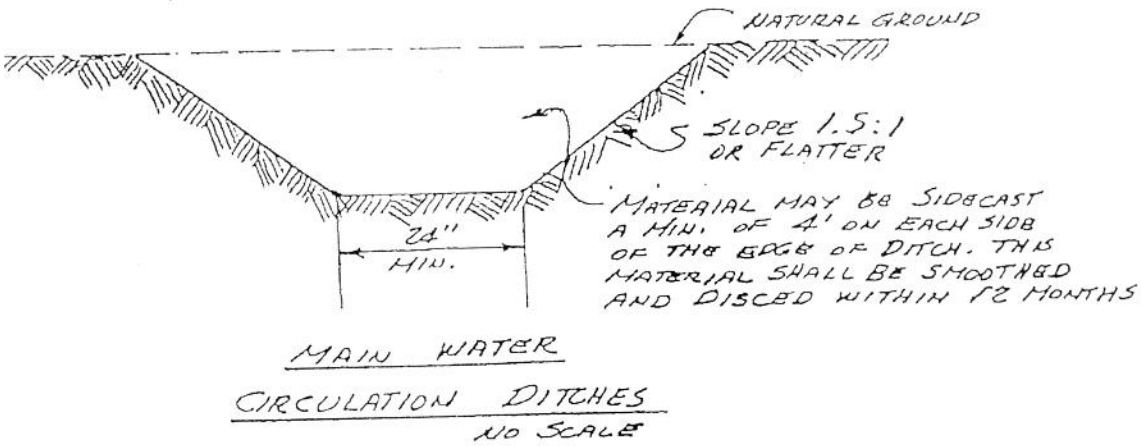

Cross Section "V" Spreader Ditch

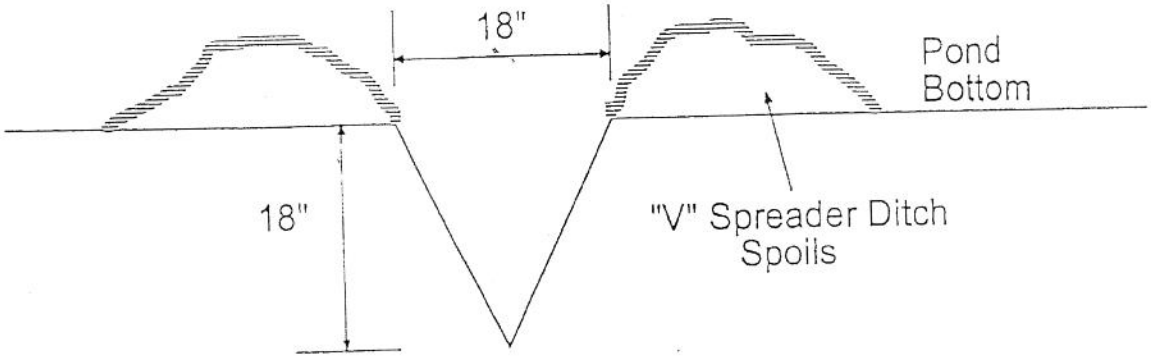

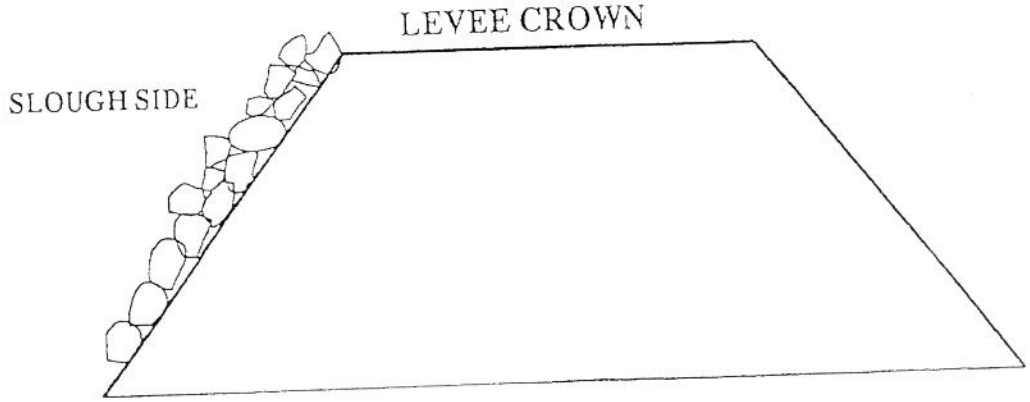

Typical Levee Section For the Replacement of Rip-Rap

PURPOSE: CONDUCTING ANNUAL WETLANDS MAINTENCE ACTIVITIES TO PROTECT AND ENHANCE SUISUN MARSH MANAGED WETLANDS. DATUM: MLLW PROPERTY OWNERS: 1. Suisun Resource Conservation District Private Landowners 2. California Department of Fish & Game	TYPICAL CROSS SECTIONS No Scale SUISUN RESOURCE CONSERVATION DISTRICT 2544 GRIZZLY ISLAND RD. SUISUN, CA 94585 CALIFORNIA DEPARTMENT OF FISH &GAME 2548 GRIZZLY ISLAND RD. SUISUN, CA 94585	IN: SUISUN MARSH NEAR FAIRFIELD AT: INDIVIDUALLY OWNED STATE AND PRIVATE PROPERTIES COUNTY OF: SOLANO STATE: CA APPLICATION BY: 1) SUISUN RESOURCE CONSERVATION DISTRICT 2) CA. DEPT. FISH & GAME DATE 5/18/12

Figure 5

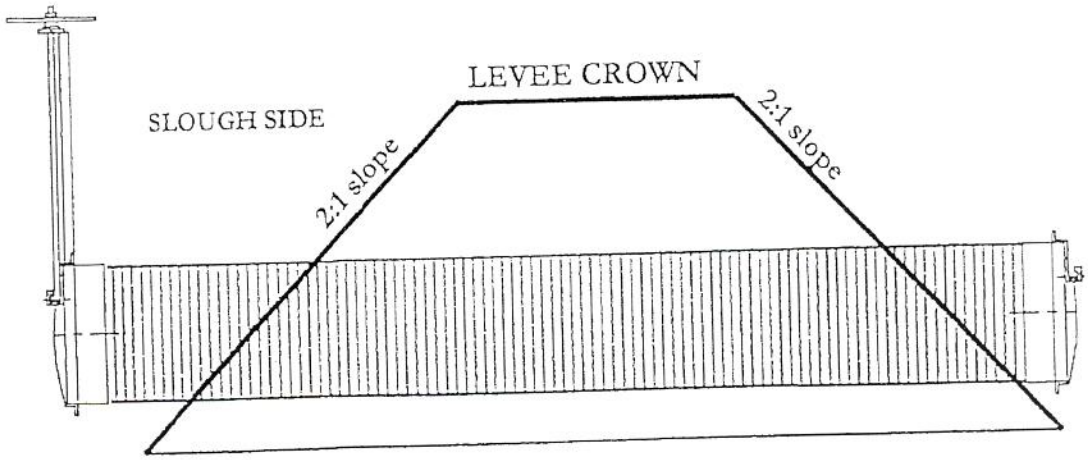

Typical Levee Section For a Flood Gate

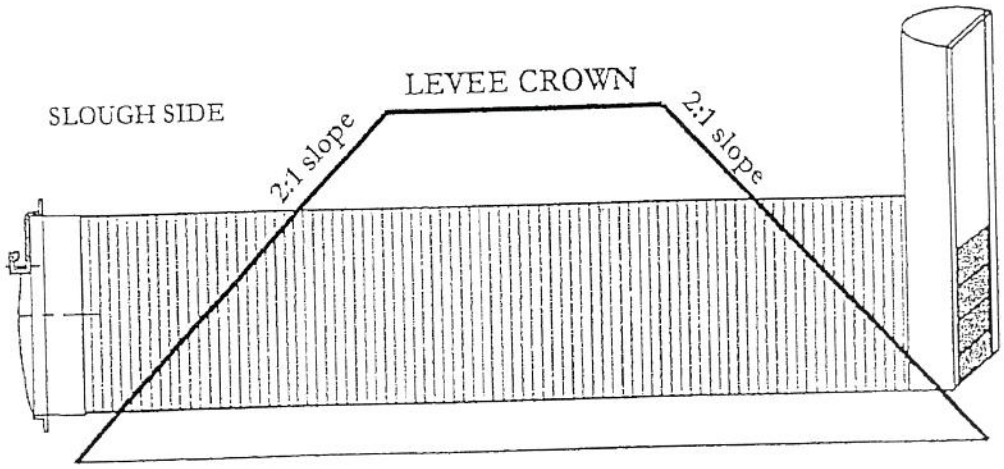

Typical Levee Section For a Drain Gate

PURPOSE: CONDUCTING ANNUAL WETLANDS MAINTENCE ACTIVITIES TO PROTECT AND ENHANCE SUISUN MARSH MANAGED WETLANDS.	TYPICAL CROSS SECTIONS	IN: SUISUN MARSH NEAR FAIRFIELD
DATUM: MLLW	No Scale	AT: INDIVIDUALLY OWNED STATE AND PRIVATE PROPERTIES
PROPERTY OWNERS:	SUISUN RESOURCE CONSERVATION DISTRICT 2544 GRIZZLY ISLAND RD. SUISUN, CA 94585	COUNTY OF: SOLANO STATE: CA
1. Suisun Resource Conservation District Private Landowners 2. California Department of Fish & Game	CALIFORNIA DEPARTMENT OF FISH &GAME 2548 GRIZZLY ISLAND RD. SUISUN, CA 94585	APPLICATION BY: 1) SUISUN RESOURCE CONSERVATION DISTRICT 2) CA. DEPT. FISH & GAME
		SHEET OF DATE 5/18/12

Figure 6

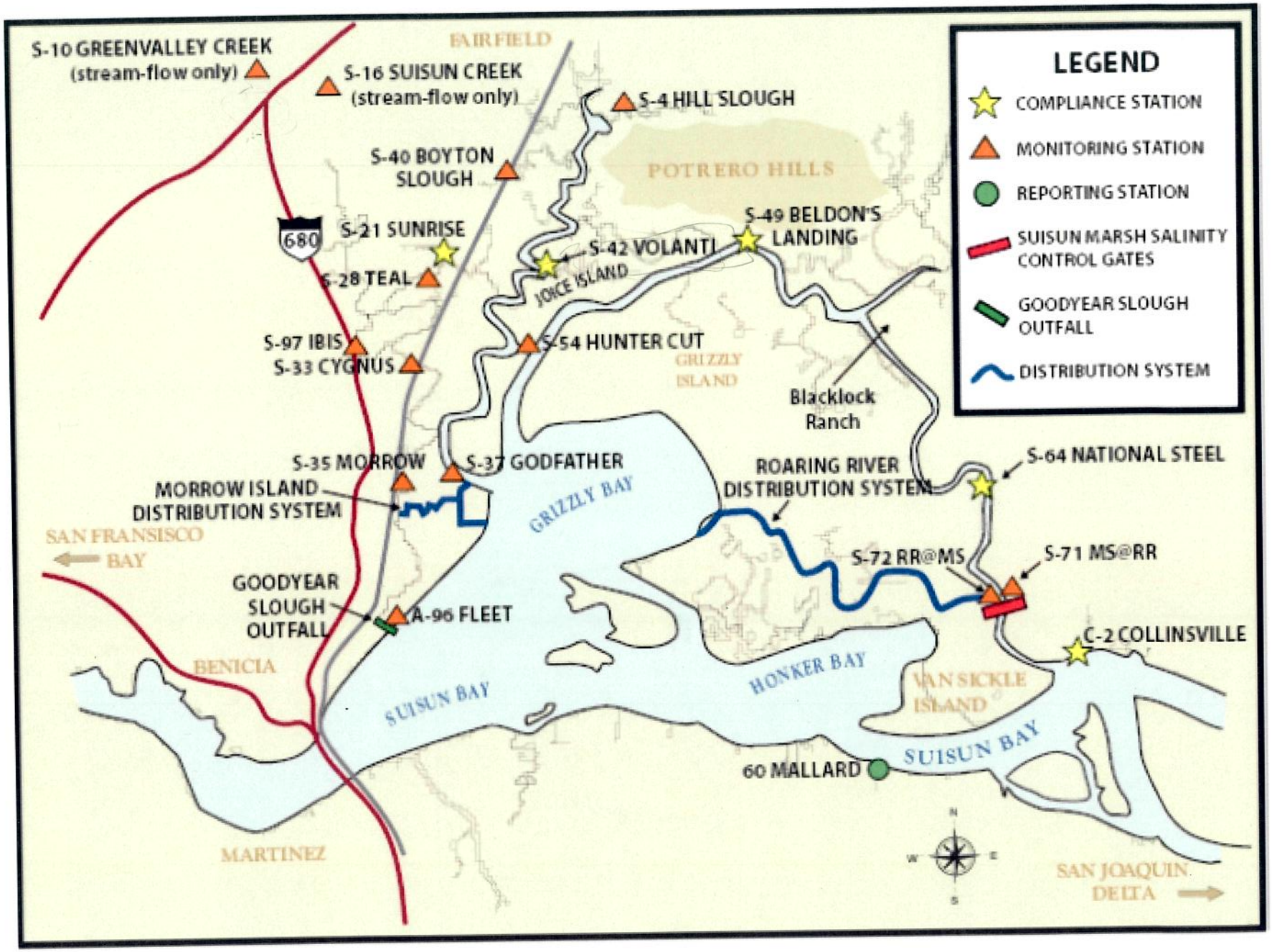
LEGEND
COMPLIANCE STATION
MONITORING STATION
REPORTING STATION
SUISUN MARSH SALINITY CONTROL GATES
GOODYEAR SLOUGH OUTFALL
DISTRIBUTION SYSTEM
S-10 GREENVALLEY CREEK (stream-flow only)
S-16 SUISUN CREEK (stream-flow only)
FAIRFIELD
S-4 HILL SLOUGH
S-40 BOYTON SLOUGH
POTRERO HILLS
680
S-21 SUNRISE
S-49 BELDON'S LANDING
S-42 VOLANTI
JOICE ISLAND
S-28 TEAL
S-97 IBIS
S-54 HUNTER CUT
S-33 CYGNUS
GRIZZLY ISLAND
Blacklock Ranch
S-35 MORROW
S-37 GODFATHER
S-64 NATIONAL STEEL
MORROW ISLAND DISTRIBUTION SYSTEM
GRIZZLY BAY
ROARING RIVER DISTRIBUTION SYSTEM
SAN FRANSISCO BAY
S-72 RR@MS
S-71 MS@RR
GOODYEAR SLOUGH OUTFALL
A-96 FLEET
C-2 COLLINSVILLE
BENICIA
HONKER BAY
VAN SICKLE ISLAND
SUISUN BAY
SUISUN BAY
60 MALLARD
MARTINEZ
SAN JOAQUIN DELTA

Figure 7

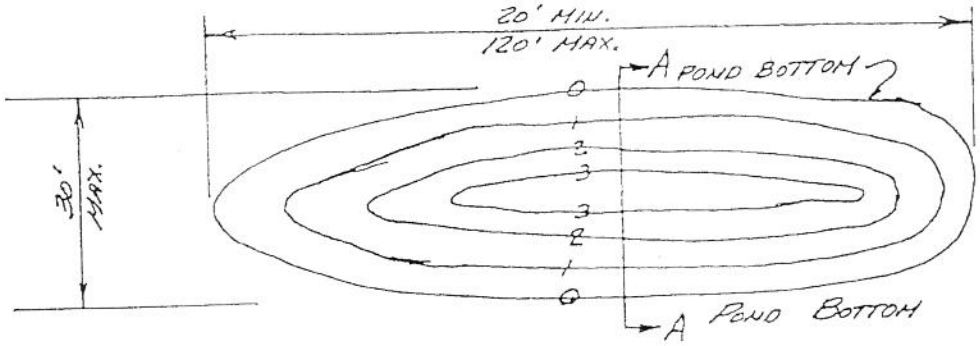

PLAN VIEW
NESTING ISLANDS
NO SCALE

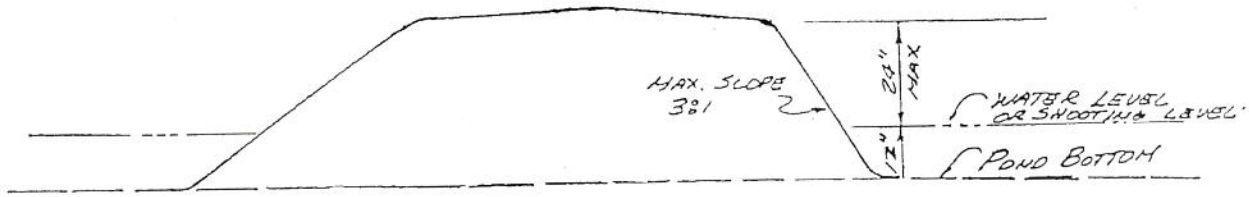

SECTION A-A
NO SCALE

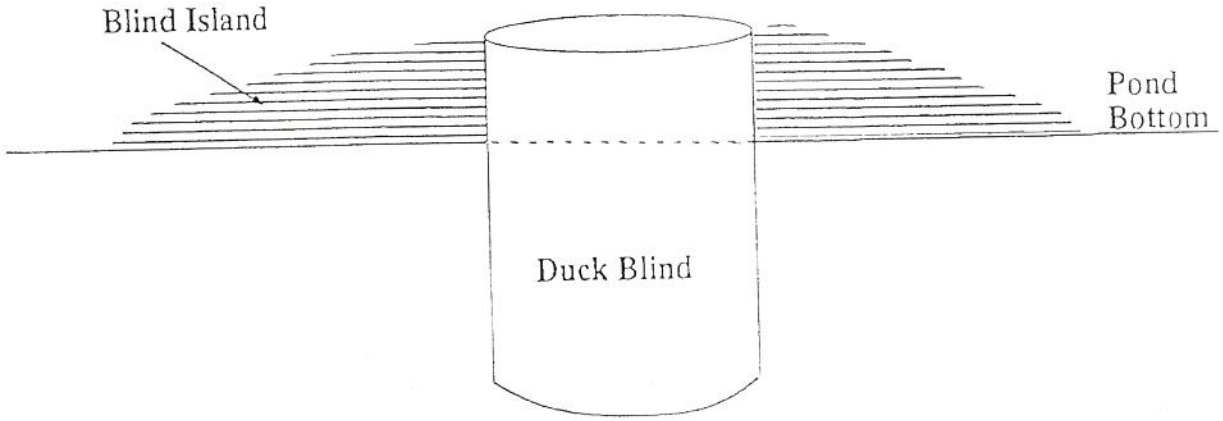

Typical Duck Blind and Blind Island Cross Section

PURPOSE: CONDUCTING ANNUAL WETLANDS MAINTENCE ACTIVITIES TO PROTECT AND ENHANCE SUISUN MARSH MANAGED WETLANDS. DATUM: MLLW PROPERTY OWNERS: 1. Suisun Resource Conservation District Private Landowners 2. California Department of Fish & Game	PLAN VIEW & TYPICAL CROSS SECTIONS No Scale SUISUN RESOURCE CONSERVATION DISTRICT 2544 GRIZZLY ISLAND RD. SUISUN, CA 94585 CALIFORNIA DEPARTMENT OF FISH &GAME 2548 GRIZZLY ISLAND RD. SUISUN, CA 94585	IN: SUISUN MARSH NEAR FAIRFIELD AT: INDIVIDUALLY OWNED STATE AND PRIVATE PROPERTIES COUNTY OF: SOLANO STATE: CA APPLICATION BY:1) SUISUN RESOURCE CONSERVATION DISTRICT 2) CA. DEPT. FISH & GAME SHEET OF DATE 5/18/12

Figure 8