100% SUBMITTAL

ROAD NO.	JOB NO.	SHEET NO.	TOTAL SHEETS
4402	300397	1	21

COUNTY OF SAN LUIS OBISPO, CALIFORNIA
PUBLIC WORKS DEPARTMENT
DESIGN DIVISION

APPROVED: _____ ,20 _____

DEPUTY DIRECTOR OF PUBLIC WORKS

PLANS FOR WIDENING OF LA PANZA ROAD FROM 1.7 MILES SOUTHEAST OF STATE ROUTE 41 TO 3.1 MILES SOUTHEAST OF STATE ROUTE 41 NEAR CRESTON, CA.
COUNTY CONTRACT No. 300397
FEDERAL No. HSIPL-5949 (133)

The Contractor shall posses the Class (or classes) of license as specified in the "Notice to Bidders"

To Be Supplemented By State Standard Plans 2006

DIGALERT

CALL BEFORE YOU DIG
1-800-227-2600

INDEX OF SHEETS

SHEET NO.	1	TITLE SHEET
SHEET NO.	2	STATE and COUNTY STANDARD PLANS LIST
SHEET NO.	3	TYPICAL SECTIONS
SHEET NO.	4	DRIVEWAY DETAILS
SHEET NO.	5	RIGHT OF WAY MAP STA. 342+00 TO 361+00
SHEET NO.	6	RIGHT OF WAY MAP STA. 361+00 TO 394+25
SHEET NO.	7	RIGHT OF WAY MAP STA. 394+25 TO 410+50
SHEET NO.	8	RIGHT OF WAY MAP STA. 410+50 TO 419+00
SHEET NO.	9	PLAN AND PROFILE STA. 347+00 TO 363+00
SHEET NO.	10	PLAN AND PROFILE STA. 363+00 TO 378+00
SHEET NO.	11	PLAN AND PROFILE STA. 378+00 TO 393+00
SHEET NO.	12	PLAN AND PROFILE STA. 393+00 TO 407+50
SHEET NO.	13	PLAN AND PROFILE STA. 407+50 TO 419+00
SHEET NO.	14	CONSTRUCTION DETAILS
SHEET NO.	15	STRIPING PLAN
SHEET NO.	16	STRIPING PLAN
SHEET NO.	17	STRIPING PLAN
SHEET NO.	18	COMPOSITE UTILITY PLAN
SHEET NO.	19	COMPOSITE UTILITY PLAN
SHEET NO.	20	COMPOSITE UTILITY PLAN
SHEET NO.	21	QUANTITY SUMMARY

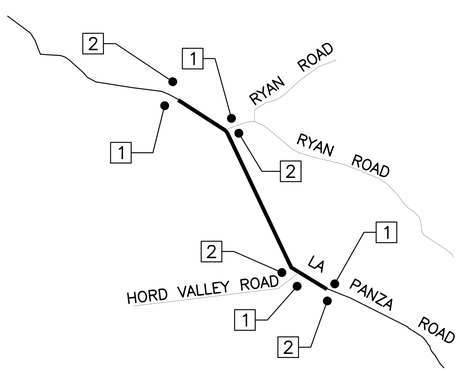

LEGEND

No.	Type	Size	Message	Quantity
1	C23(CA.)	48"X48"	"ROAD WORK AHEAD"	4
2	C14(CA.)	48"x24"	"END ROAD WORK"	4

NOTES:

All Signs Shall Be Stationary Mounted on 4x4 Wood Posts, Unless Noted Otherwise or as directed by the Engineer.

All Construction Signs Shall be Placed Approximately 4' off the Edge of Roadway, the Exact Location and Position of Signs Shall be Determined by the Engineer.

CONSTRUCTION AREA SIGN PLAN

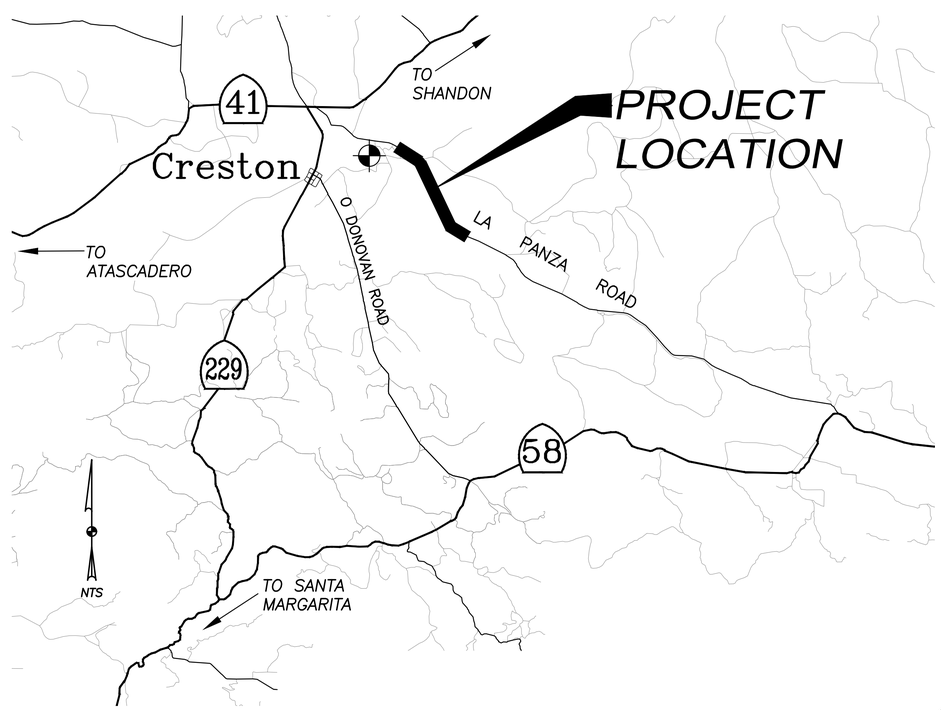

LOCATION MAP
NO SCALE

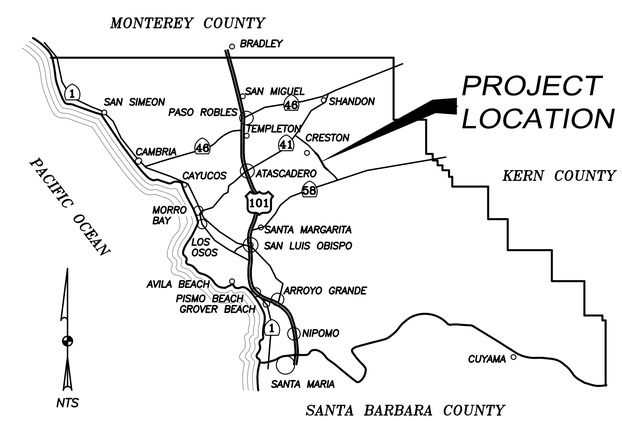

VICINITY MAP
NO SCALE

REGISTERED PROFESSIONAL ENGINEER KIDD C. IMMEL C 68427 EXP 2-31-13 CIVIL STATE OF CALIFORNIA

DRAFT

LA PANZA ROAD WIDENING PROJECT					
TITLE SHEET					
CRESTON, CA					
Designer	Date	Drawn By	Date	Design Engineer	Date
K IMMEL	11/12	C COX	11/12	J WERST	11/12

V:\AUTOCAD CIVIL 3D PROJECTS\CIVIL 3D 2011\LA PANZA ROAD\2011\Final Drawings\Title Sheet.dwg, 12/5/2012 9:41:31 AM, ccox

100% SUBMITTAL

ROAD NO.	JOB NO.	SHEET NO.	TOTAL SHEETS
4402	300397	3	21

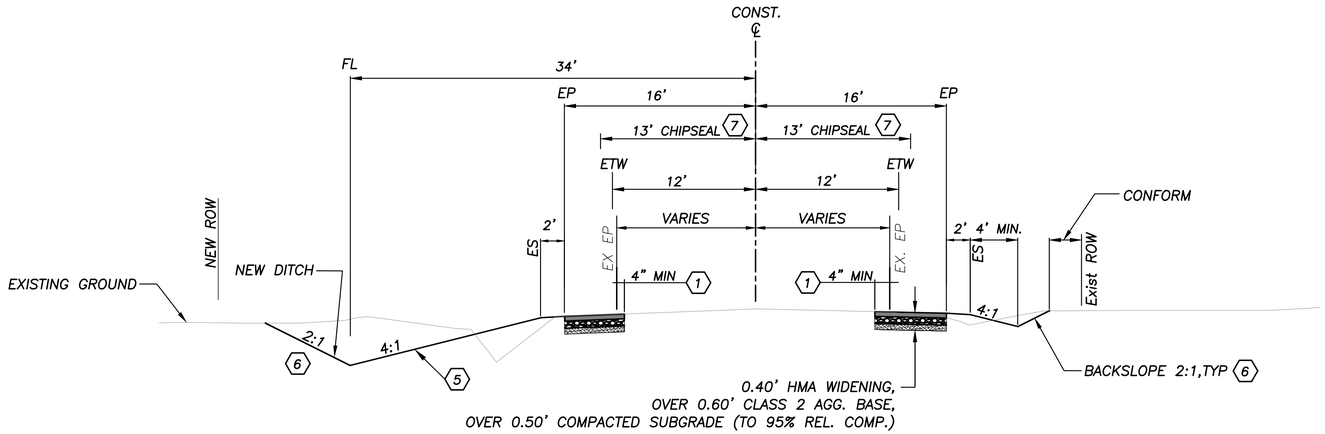

TYPICAL SECTION

LA PANZA ROAD – NOT TO SCALE

CONSTRUCTION NOTES

1. GRIND OR SAWCUT TO A NEAT LINE PARALLEL TO CONSTRUCTION CL. VERIFY LAYOUT WITH ENGINEER PRIOR TO REMOVAL OF EXISTING AC.
2. CONSTRUCT 8 FT X 8 FT x 15" THICK ROCK–LINED (BACKING No. 2 OVER TYPE A FABRIC) DRAIN INLET. CUT HDPE PIPE TO MATCH SLOPE. ASSURE TIGHT PLACEMENT OF RSP.
3. CONSTRUCT PIPE OUTLET INVERT 6" ABOVE FLOWLINE OF DITCH. CUT HDPE PIPE TO MATCH SLOPE. PLACE ADDITONAL RSP AROUND CIRCUMFERENCE OF HDPE PIPE AND ASSURE TIGHT RSP PLACEMENT.
4. VERIFY CLEARANCE TO EXISTING AT&T CABLE WITH ENGINEEER PRIOR TO PLACING PIPE (6" CLR MIN). CABLE LOCATION SHOWN IS APPROXIMATE ONLY, CONTRACTOR SHALL DETERMINE LOCATION OF CABLE AND ASSURE CABLE IS NOT DISTURBED DURING CULVERT EXACAVATION.
5. HYDROSEED THEN LINE DITCH WITH JUTE MESH PER CONTRACTORS APPROVED SWPPP.
6. STEEPEN BACK SLOPE WHEN CALLED FOR ON PLAN SHEETS OR AS DIRECTED BY ENGINEER, AS REQUIRED TO DAYLIGHT WITHIN ROW LINES. SEE CROSS–SECTION SHEETS FOR ADDITIONAL DETAILS.
7. CONSTRUCT SINGLE CHIPSEAL FROM STA 352+00 TO 420+00.

FENCE REMOVE & REPLACE SCHEDULE STAIONING AND DISTANCES SHOWN HEREON IS TO BE USED FOR GUIDANCE, AND IS APPROXIMATE ONLY. ACTUAL STATIONING AND LENGTH OF REMOVAL TO BE DETERMINED IN THE FIELD, VERIFY LOCATIONS WITH ENGINEER PRIOR TO REMOVAL.

FENCE REMOVE & REPLACE SCHEDULE

LEFT: 356+50→359+15 =265'
359+15→376+20 =1705'
381+70→388+90 =720'
388+90→395+90 (deer fence) =700'
405+25→419+00 =1375'

RIGHT: 370+25→371+25 =100'
374+00→374+40 =40'
374+80→376+00 =120'

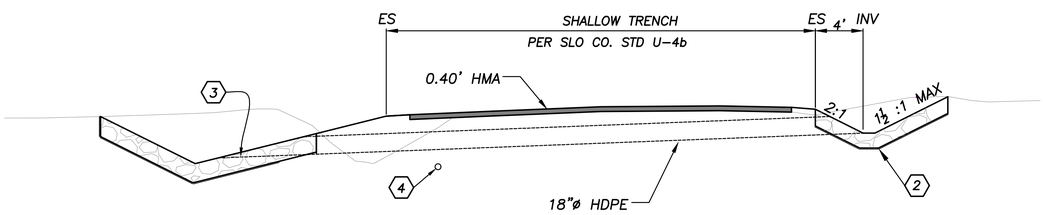

TYPICAL SECTION AT CULV XING

LA PANZA ROAD – NOT TO SCALE

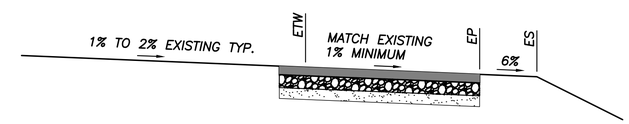

TYPICAL NORMAL AND LOW SIDE OF SUPERELEVATED SECTIONS

NOT TO SCALE

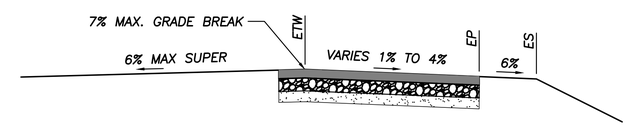

TYPICAL HIGH SIDE OF SUPERELEVATED SECTIONS

NOT TO SCALE

REGISTERED PROFESSIONAL ENGINEER KODD C. IMMEL C 68427 EXP 2-28-13 CIVIL STATE OF CALIFORNIA

DRAFT

LA PANZA ROAD WIDENING PROJECT					
TYPICAL SECTIONS					
CRESTON, CA					
Designer	Date	Drawn By	Date	Design Engineer	Date
K IMMEL	11/12	C COX	11/12	J WERST	11/12

V:\AUTOCAD CIVIL 3D PROJECTS\CIVIL 3D 2011\LA PANZA ROAD\2011\Final Drawings\Typ Sections and Details.dwg, 12/5/2012 9:41:51 AM, ccox

100% SUBMITTAL

ROAD NO.	JOB NO.	SHEET NO.	TOTAL SHEETS
4402	300397	4	21

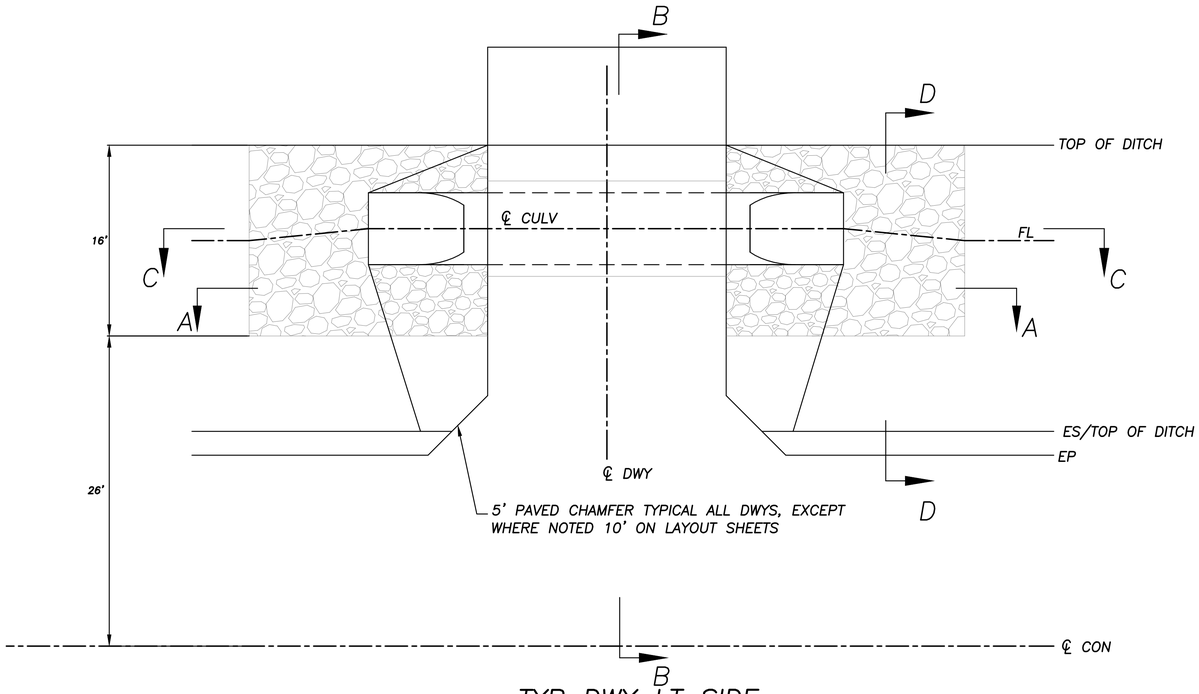

TYP DWY LT SIDE

PLAN VIEW – NOT TO SCALE

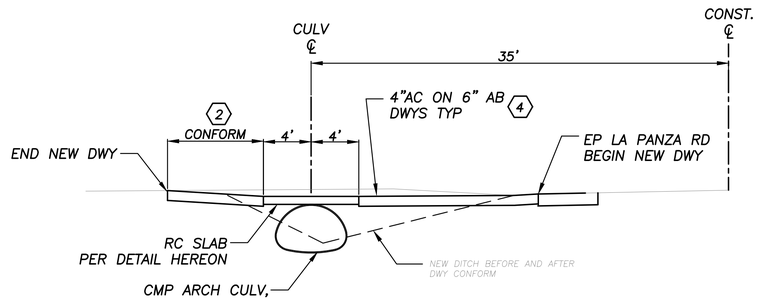

TYP DWY LT SIDE

SECTION B–B – NOT TO SCALE

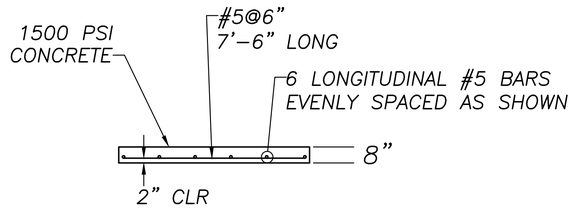

DWY RC SLAB DETAIL

NOTE TO SCALE

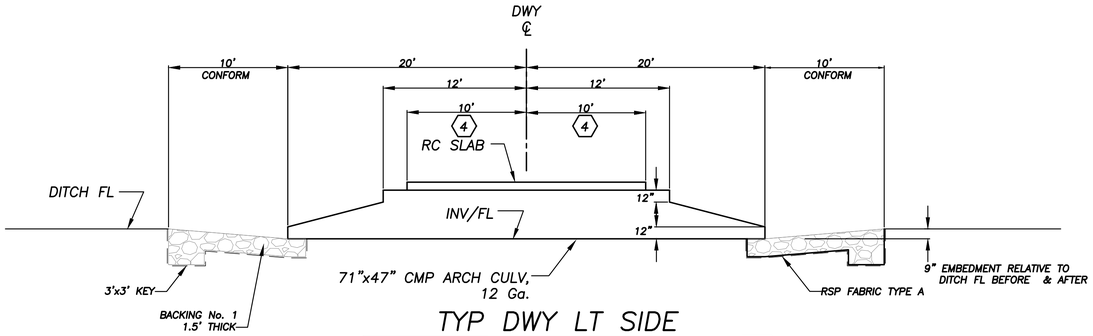

TYP DWY LT SIDE

SECTION C–C PROFILE AT CL CULV – NOT TO SCALE

DWY LT SIDE

SECTION A–A – NOT TO SCALE

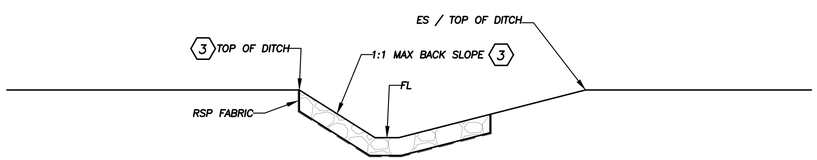

RSP CONFORM DETAIL

SECTION D–D – NOT TO SCALE

GENERAL NOTES

1) CONTRACTOR SHALL MAINTAIN ACCESS TO RESIDENCES DURING CONSTRUCTION.

2) DRIVEWAYS ENTRANCES ARE CONSTRUCTED LOWER THAN LA PANZA ROAD SO THAT DURING FLOOD EVENTS DRIVEWAYS WILL OVERTOP AND CONVEY FLOW PRIOR TO LA PANZA ROAD FLOODING. SEE CROSS SECTION SHEETS FOR DRIVEWAY PROFILES. DO NOT "CROWN" DRIVEWAYS.

CONSTRUCTION NOTES

1. RSP THICKNESS MAY BE REDUCED TO 12" THICK MINIMUM ON DWY SLOPE WHERE FABRIC IS NOT REQUIRED. ASSURE TIGHT AND SECURE PLACEMENT OF RSP AROUND CULVERT INLET AND OUTLET, AND ALSO ALONG EDGE OF DRIVEWAY PAVEMENT. RSP ALONG DRIVEWAY PAVEMENT TO ACT SIMILAR AS A CURB.

2. SEE CROSS SECTION SHEETS FOR ADDITIONAL CONFORM INFORMATION, CONFORM DISTANCE VARIES AT EACH DRIVEWAY. FIELD VERIFY DRIVEWAY CONFORM AND VERTICAL LAYOUT WITH ENGINEER PRIOR TO CONSTRUCTING DRIVEWAYS.

3. ADJUST TOP OF DITCH LINE AT CONFORM ADJACENT TO CULVERT IF NECESSARY TO STABILIZE AND FLATTEN BACK–SLOPE.

4. RECONSTRUCTED DRIVEWAY THROAT–WIDTHS ARE 20' WIDE, AND ARE 4" HMA ON 6" AB. THIS INCLUDES DRIVERWAYS ON LEFT SIDE AND RIGHT SIDE AND HORD VLY RD AND RYAN RD.

REGISTERED PROFESSIONAL ENGINEER
KUDO C. IMMEL
C 66427
Exp 2-30-13
CIVIL
STATE OF CALIFORNIA

DRAFT

LA PANZA ROAD WIDENING PROJECT					
DRIVEWAY DETAILS					
CRESTON, CA					
Designer	Date	Drawn By	Date	Design Engineer	Date
K IMMEL	11/12	C COX	11/12	J WERST	11/12

V:\AUTOCAD CIVIL 3D PROJECTS\CIVIL 3D 2011\LA PANZA ROAD\2011\Final Drawings\Typ Sections and Details.dwg, 12/5/2012 9:41:57 AM, ccox

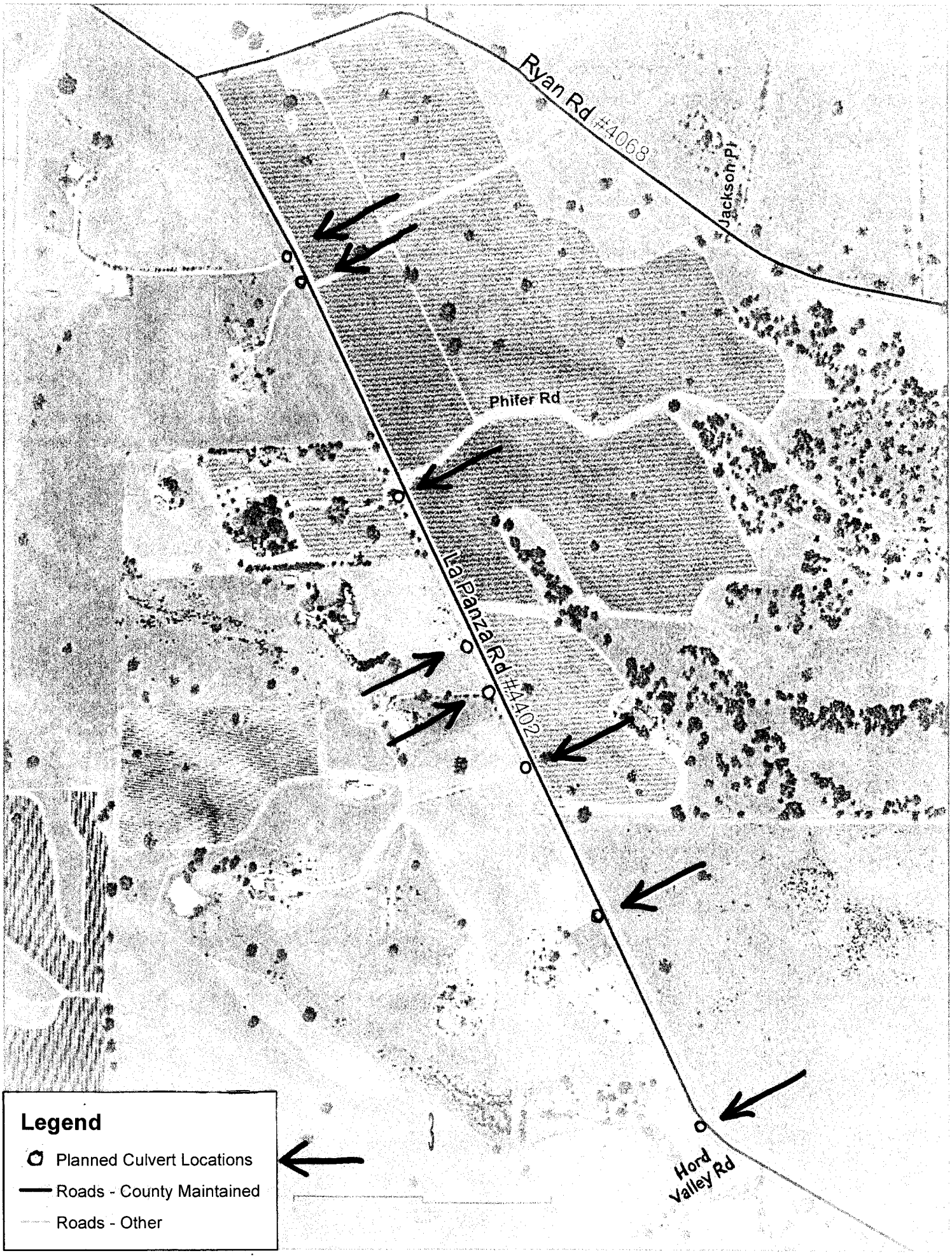
Ryan Rd #4068
Jackson Pl
Phifer Rd
La Panza Rd #4402
Hord Valley Rd
Legend
Planned Culvert Locations
Roads - County Maintained
Roads - Other