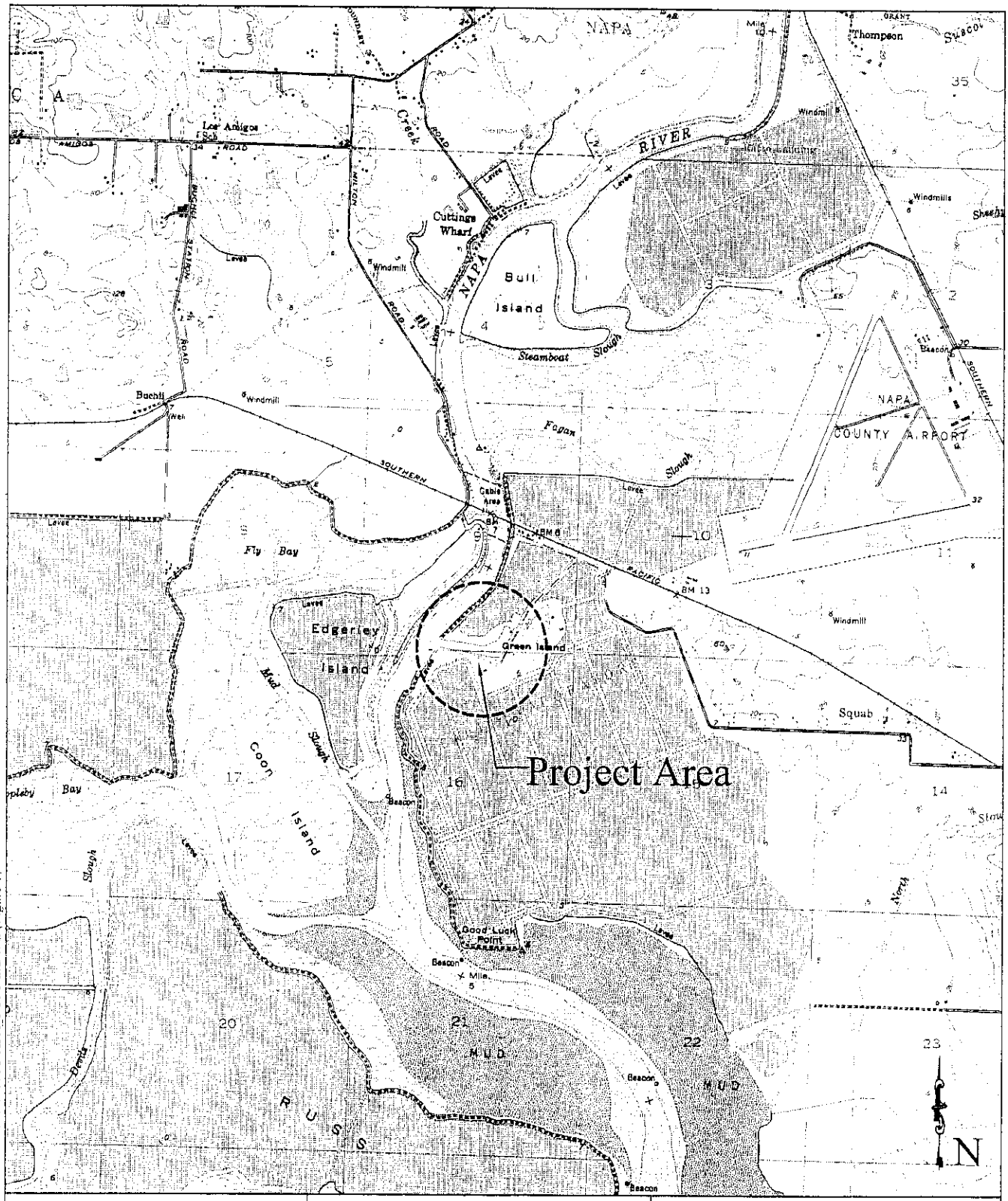

PURPOSE: Salt Removal SOURCE: USGS DRG 1:24000	Figure 1: Location Map 1500 0 1500 3000 FEET SCALE 1:36000 Wetlands Research Associates, Inc. 2169-G East Francisco Blvd. San Rafael, CA 94901 Contact: Michael Josselyn Phone: 415-454-8868	Napa Salt Ponds LOCATION: Lower Napa River COUNTY: Napa APPLICATION BY: Dept. of Fish and Game SHEET: 1 of 9 DATE: 03/19/03

Mar 19, 2003 - 2:01pm L:\Acad 2000 Files\00000\0100\NAPA_PONDS.DWG (Figure 1)

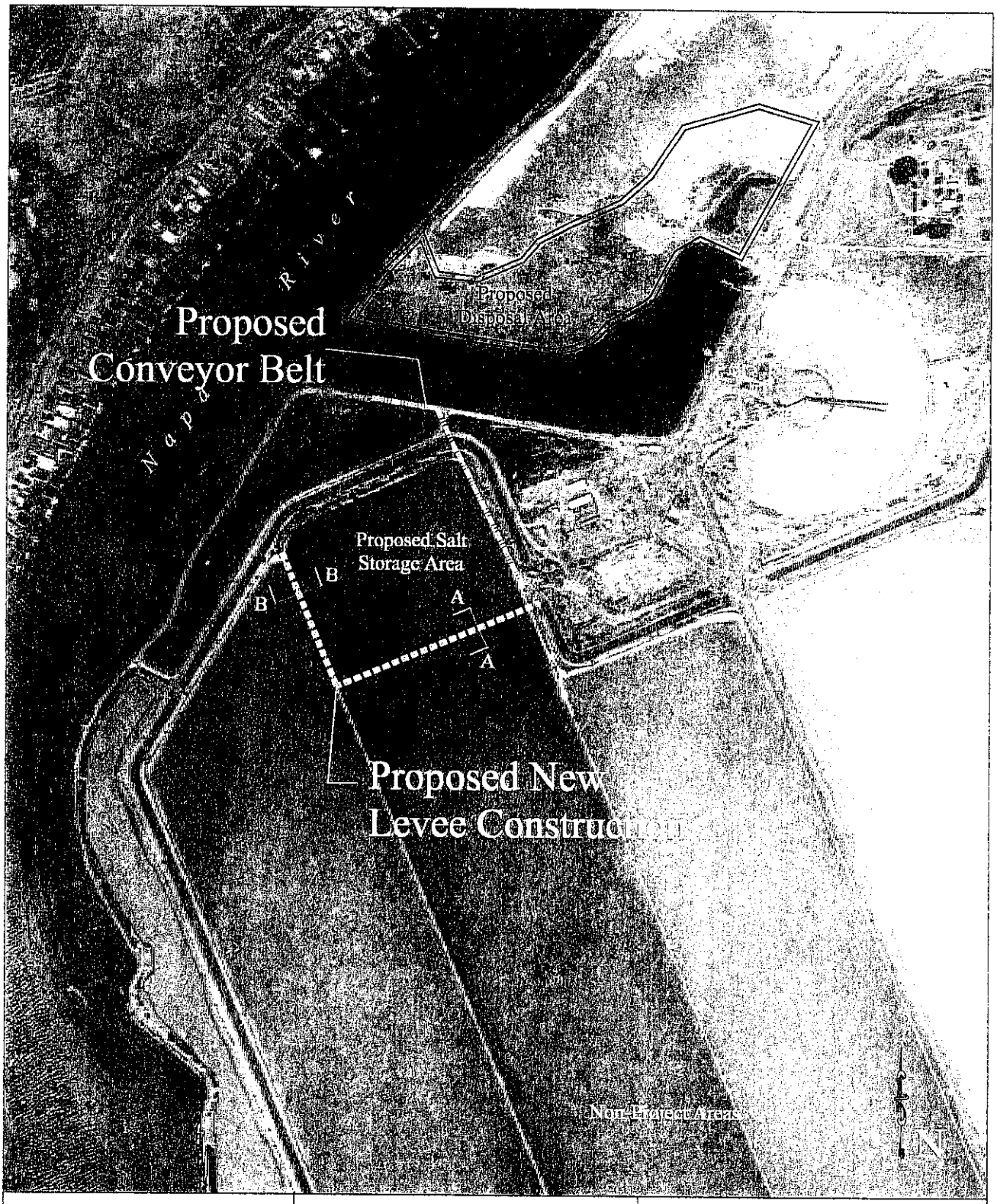

PURPOSE: Salt Removal

SOURCE: Pacific Aerial Surveys 06/28/00

Figure 2: Proposed Project

500 0 500 1000 FEET

SCALE 1:6000

Wetlands Research Associates, Inc.
2169-G East Francisco Blvd.
San Rafael, CA 94901
Contact: Michael Josselyn
Phone: 415-454-8868

Napa Salt Ponds

LOCATION: Lower Napa River

COUNTY: Napa

APPLICATION BY: Dept. of Fish and Game

SHEET: 2 of 9 DATE: 03/19/03

Mar 19, 2003 - 2:32pm L:\Acad 2000 Files\00000\0160\NAPA_PONDS.DWG (Figure 2)

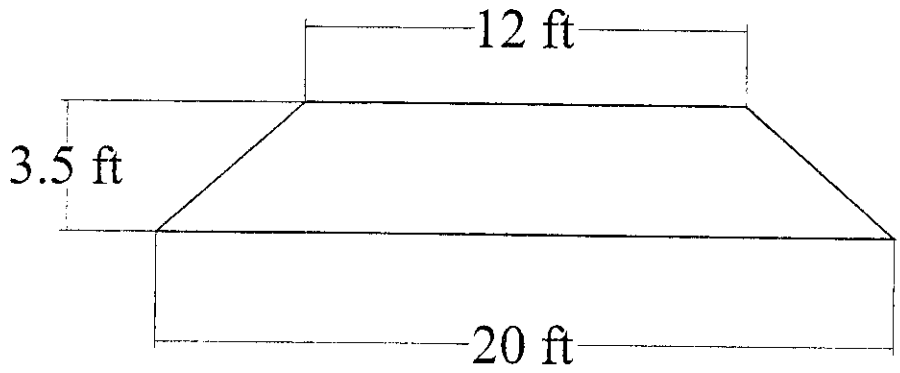

Cross Section of New Levee
Section A-A

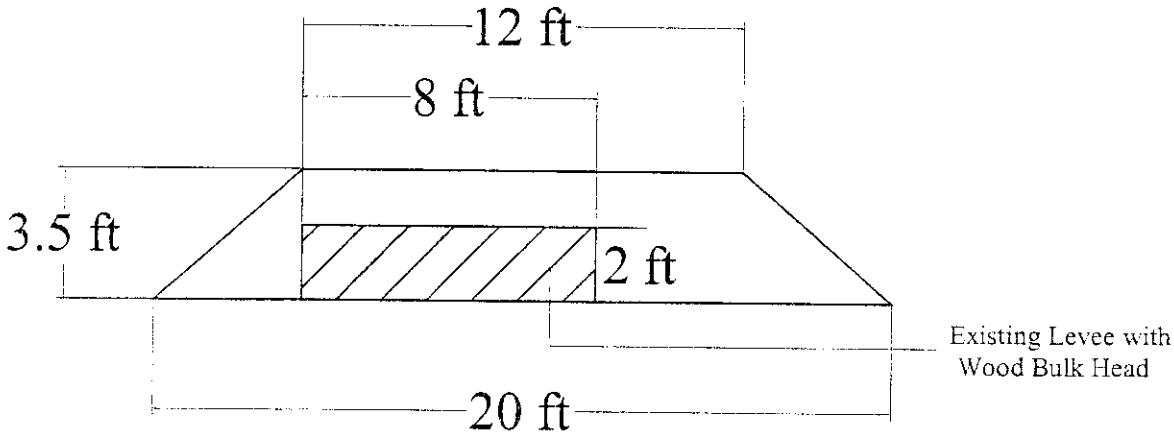

Cross Section of New Levee
Section B-B

Mar 19, 2003 2:02pm L:\Acad 2000 Files\0000001001\NAPA PONDS.DWG (Figure 3)

PURPOSE: Salt Removal	Figure 3: Cross Section of New Levee 2.5 0 2.5 5 FEET SCALE 1:60 Wetlands Research Associates, Inc. 2169-G East Francisco Blvd. San Rafael, CA 94901 Contact: Michael Josselyn Phone: 415-454-8868	Napa Salt Ponds LOCATION: Lower Napa River COUNTY: Napa APPLICATION BY: Dept. of Fish and Game SHEET: 3 of 9 DATE: 03/19/03

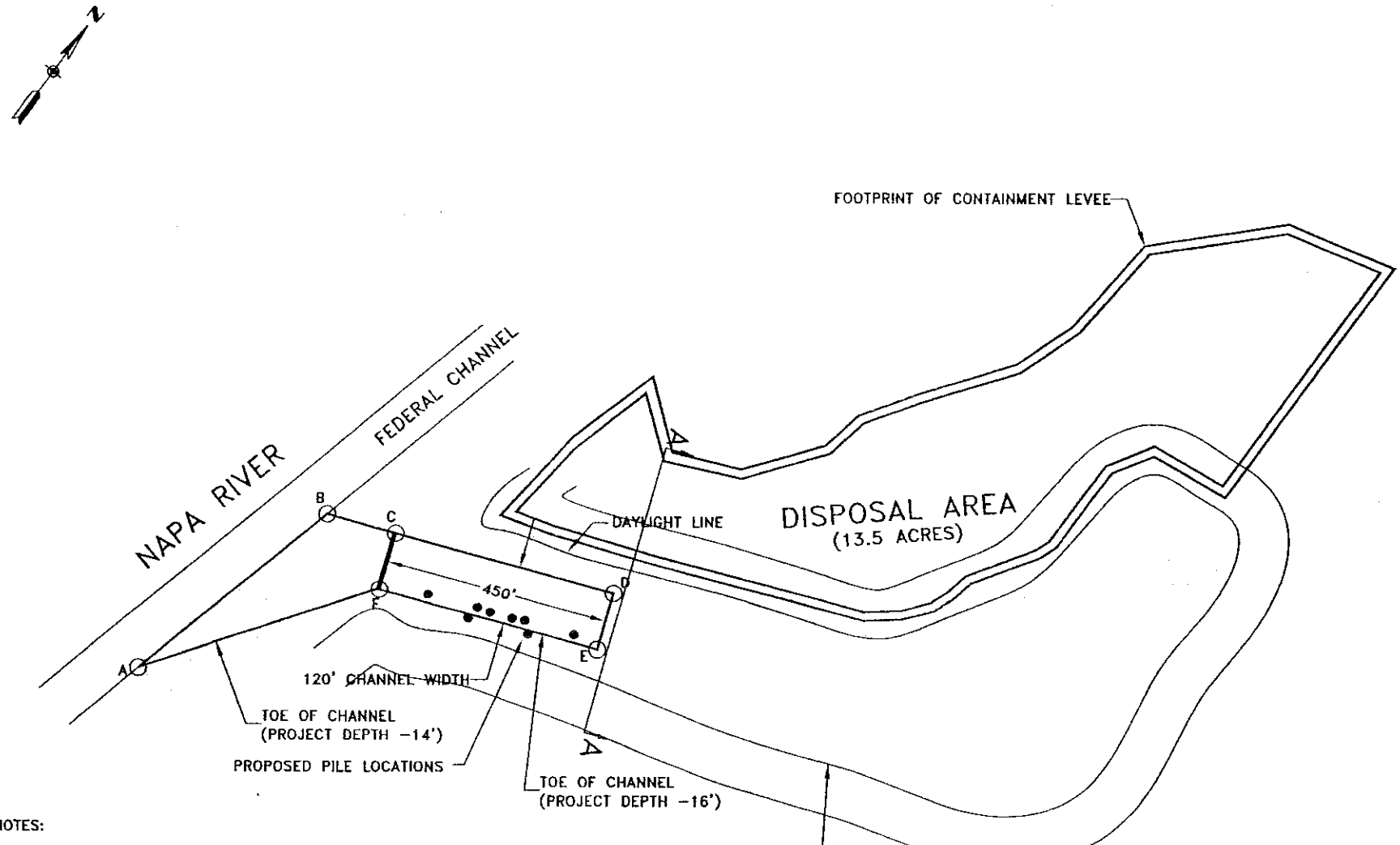

NOTES:

1. SURVEY PERFORMED BY FREMONT ENGINEERS ON 7-22-02 AND US ARMY CORPS OF ENGINEERS ON 4-14/16-99.
2. ALL ELEVATIONS CORRECTED TO FEET, MLLW.
3. CONTOURS OBTAINED FROM 3D MODEL INTERPOLATION.
4. HORIZONTAL COORDINATES ARE APPROXIMATE AND BASED ON LAMBERT CONFORMAL PROJECTION, ZONE III CALIFORNIA STATE PLANE NAD83.
5. APPLICATION BY THE DEPARTMENT OF FISH AND GAME

COORD	EASTING	NORTHING
A	6,040,777	2,264,775
B	6,041,116	2,265,131
C	6,041,257	2,265,109
D	6,041,257	2,265,109
E	6,041,682	2,264,919
F	6,041,238	2,264,991

1"=300'

GBA
ENGINEERS ✦ SURVEYORS
33 Commercial Blvd.
Suite A
Novato, CA 94949-6113
Phone (415) 883-7683

NAPA BARGE CANAL DREDGING

PLAN VIEW

Sheet 4 of 9

FIGURE 4

DATE: 2-3-03

Mar 19, 2003 - 2:09pm L:\Acad 2000 Files\00000\01001\FIGURE4.DWG (Layout1)

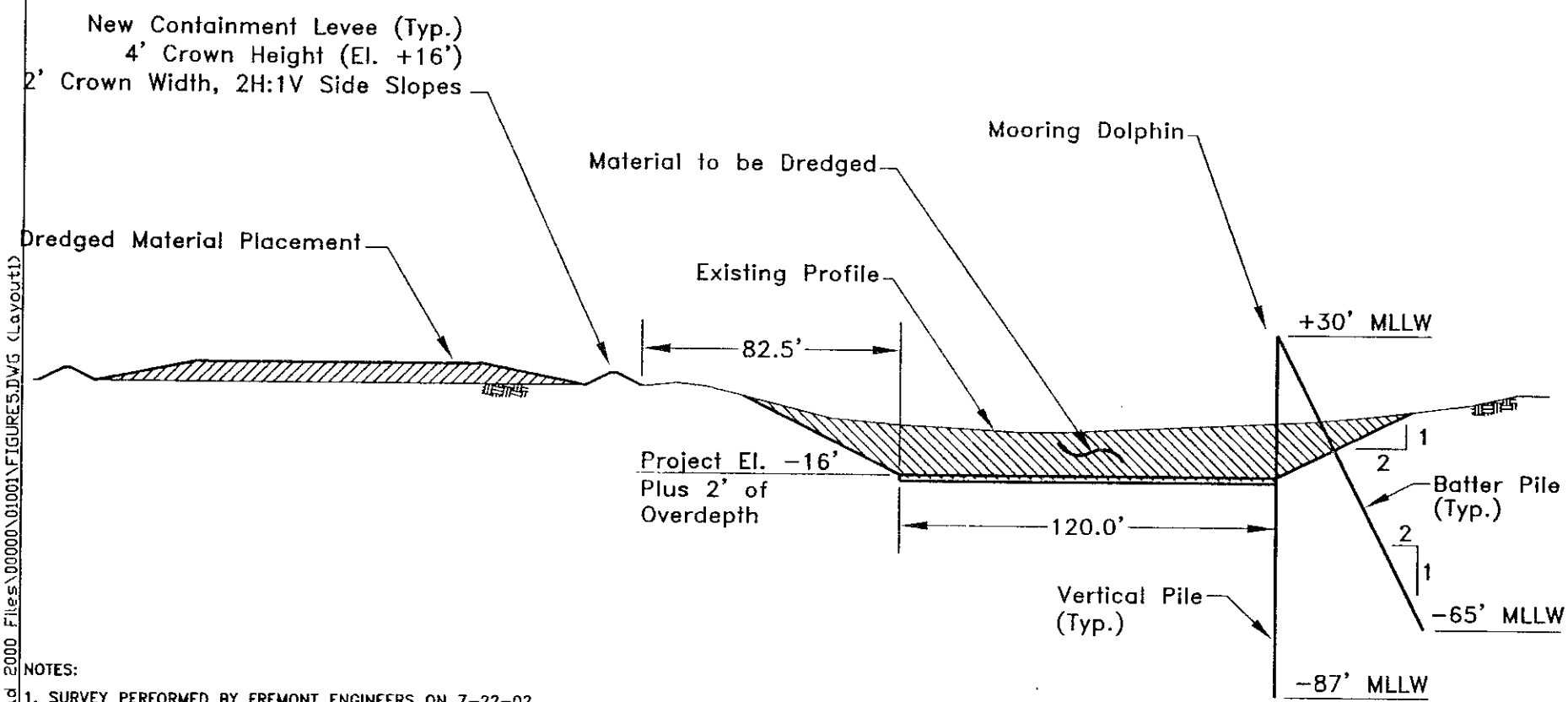

NOTES:

1. SURVEY PERFORMED BY FREMONT ENGINEERS ON 7-22-02 AND US ARMY CORPS OF ENGINEERS ON 4-14/16-99.
2. ALL ELEVATIONS CORRECTED TO FEET, MLLW.
3. BATHYMETRY PROFILES OBTAINED FROM 3D MODEL INTERPOLATION.
4. SCALE OF CROSS SECTION IS 1"=50' HORIZ. AND VERT.
5. APPLICATION BY THE DEPARTMENT OF FISH AND GAME

GBA
ENGINEERS ♥ SURVEYORS
33 Commercial Blvd.
Suite A
Novato, CA 94949 6113
Phone (415) 883-7683

NAPA BARGE CANAL
PILE DRIVING AND DREDGING
TYPICAL SECTION A-A

Sheet 5 of 9

FIGURE 5
AMENDMENT 2
DATE: 3-13-03

Mar 19, 2003 - 2:08pm L:\Acad 2000 Files\00000\01001\FIGURE5.DWG (Layout1)

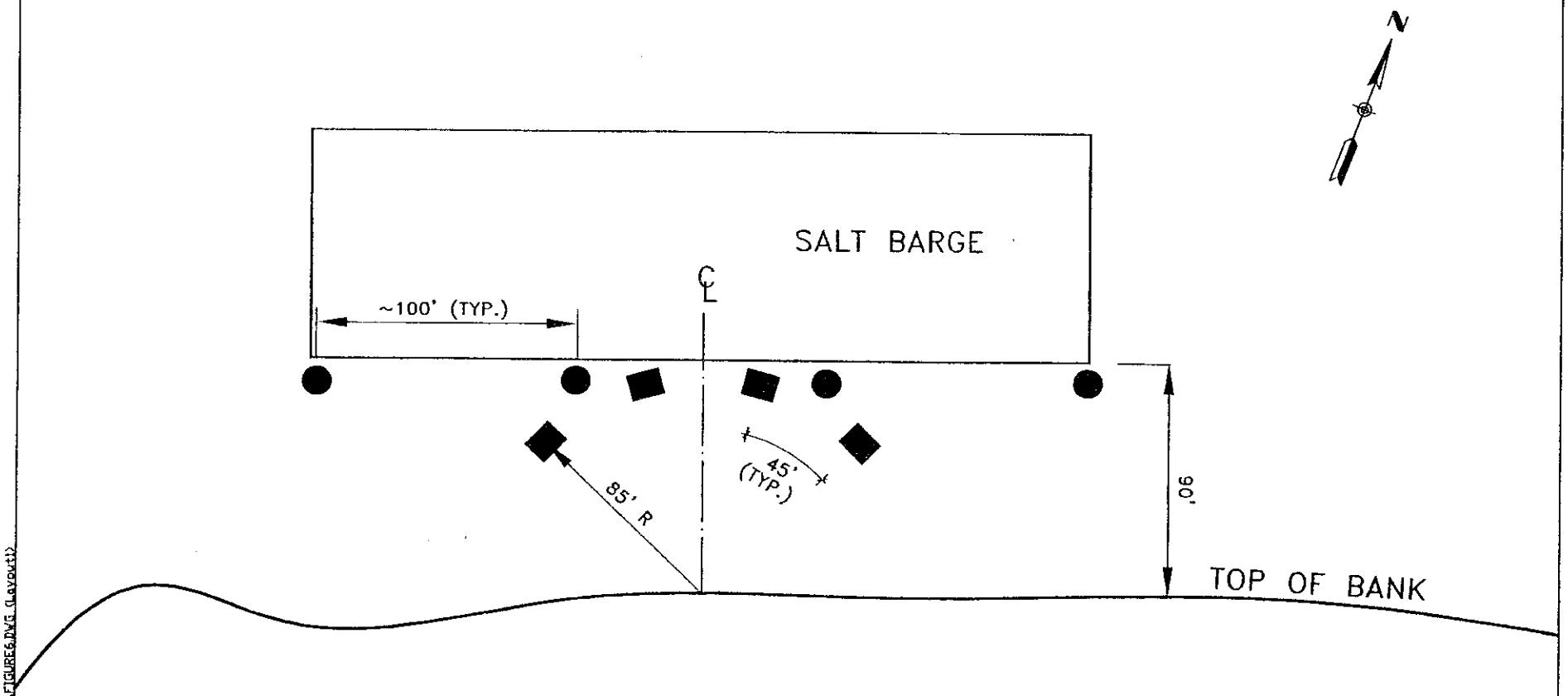

PILE PLAN

SCALE: 1"=60'

LEGEND

- ● 8-STEEL PILE GROUP, HP-12, 65' PENETRATION
- ■ 4-STEEL PILE GROUP, HP-12, 65' PENETRATION

NOTE:
1. APPLICATION BY THE DEPARTMENT OF FISH AND GAME

GBA ENGINEERS ♥ SURVEYORS
33 Commercial Blvd.
Suite A
Novato, CA 94949-6113
Phone (415) 883-7683

NAPA BARGE CANAL
PILE DRIVING AND DREDGING
PLAN VIEW

Sheet 6 of 9

FIGURE 6
AMENDMENT 1
DATE: 2-28-03

Mar 19, 2003 - 2:05pm L:\Acad 2000 Files\00000\01001\FIGURE6.DWG (Layout1)

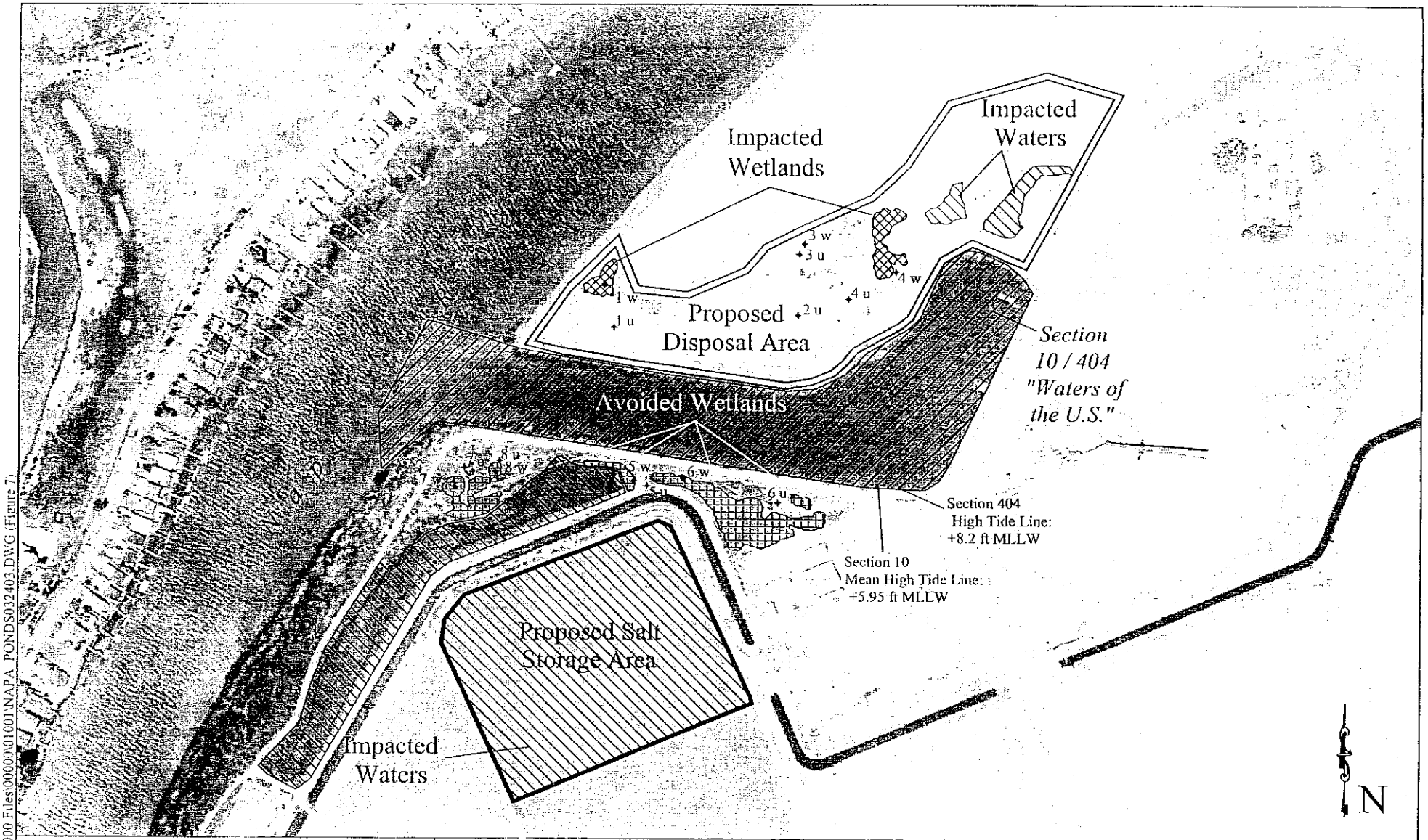

PURPOSE: Salt Removal

SOURCE: Pacific Aerial Surveys 06/28/00

KEY:
- Avoided Wetlands
- Impacted Wetlands
- Section 404 Jurisdictional Waters of the U.S.
- Section 404 Jurisdictional / Section 10 Navigable Waters of the U.S.
- 1 u Data Point Location

Figure 7: Jurisdictional Wetlands and Waters

400 0 400 800 FEET

SCALE 1:4800

Wetlands Research Associates, Inc.
2169-G East Francisco Blvd.
San Rafael, CA 94901
Contact: Michael Josselyn
Phone: 415-454-8868

Napa Salt Ponds

LOCATION: Lower Napa River

COUNTY: Napa

APPLICATION BY: Dept. of Fish and Game

SHEET: 7 of 9 DATE: 03/19/03

Mar 24, 2003 - 1:15pm L:\Acad 2000 Files\0000001001\NAPA_PONDS032403.DWG (Figure 7)

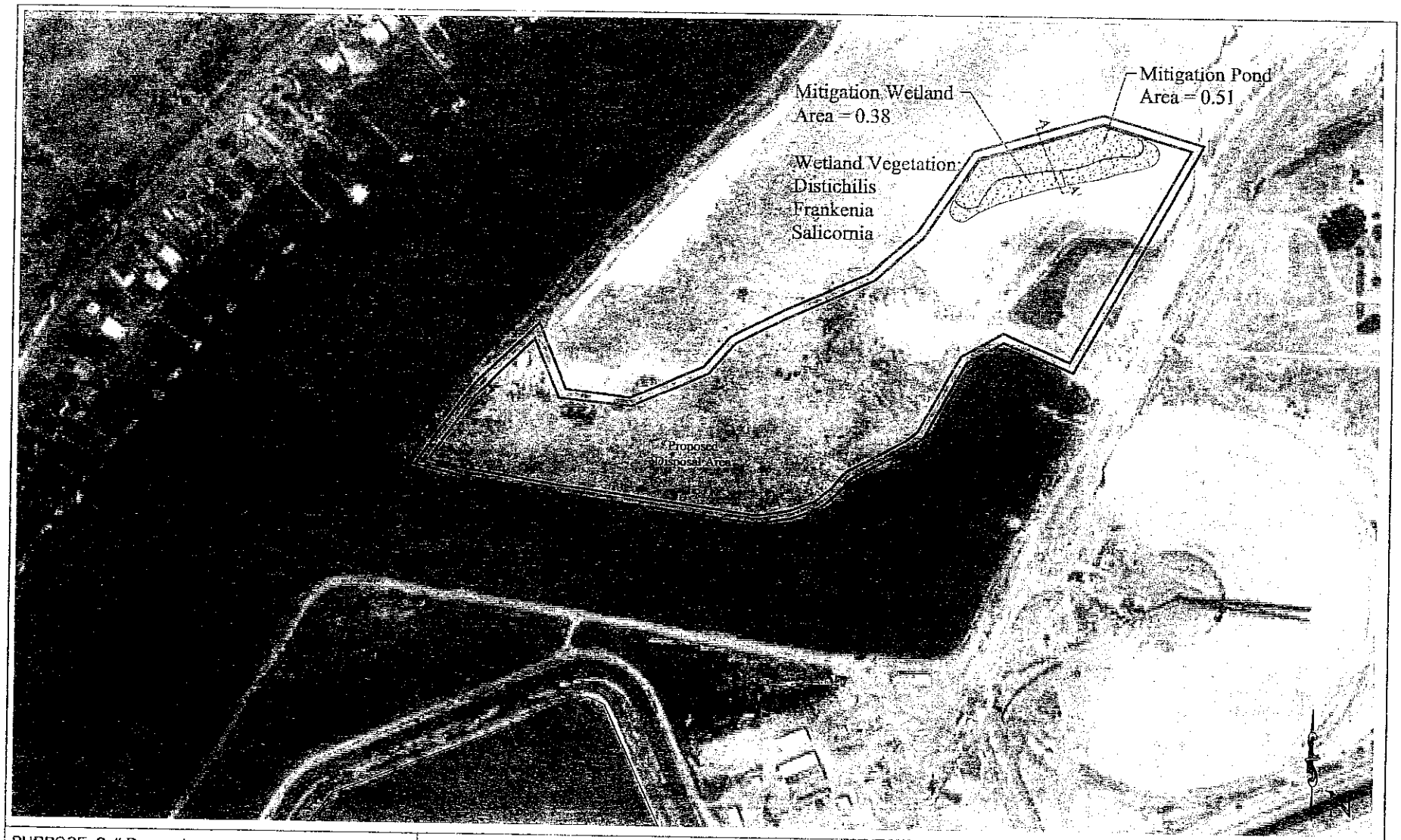

PURPOSE: Salt Removal

SOURCE: Pacific Aerial Surveys
06/28/00

L: Land Projects\01001\schematic_plan.dwg

Figure 8: Mitigation Wetland and Pond - Plan View

300 0 300 600 FEET

SCALE 1:3600

Wetlands Research Associates, Inc.
2169-G East Francisco Blvd.
San Rafael, CA 94901
Contact: Michael Josselyn
Phone: 415-454-8868

Napa Salt Ponds

LOCATION: Lower Napa River

COUNTY: Napa

APPLICATION BY: Dept. of Fish and Game

SHEET: 8 of 9 DATE: 03/14/03

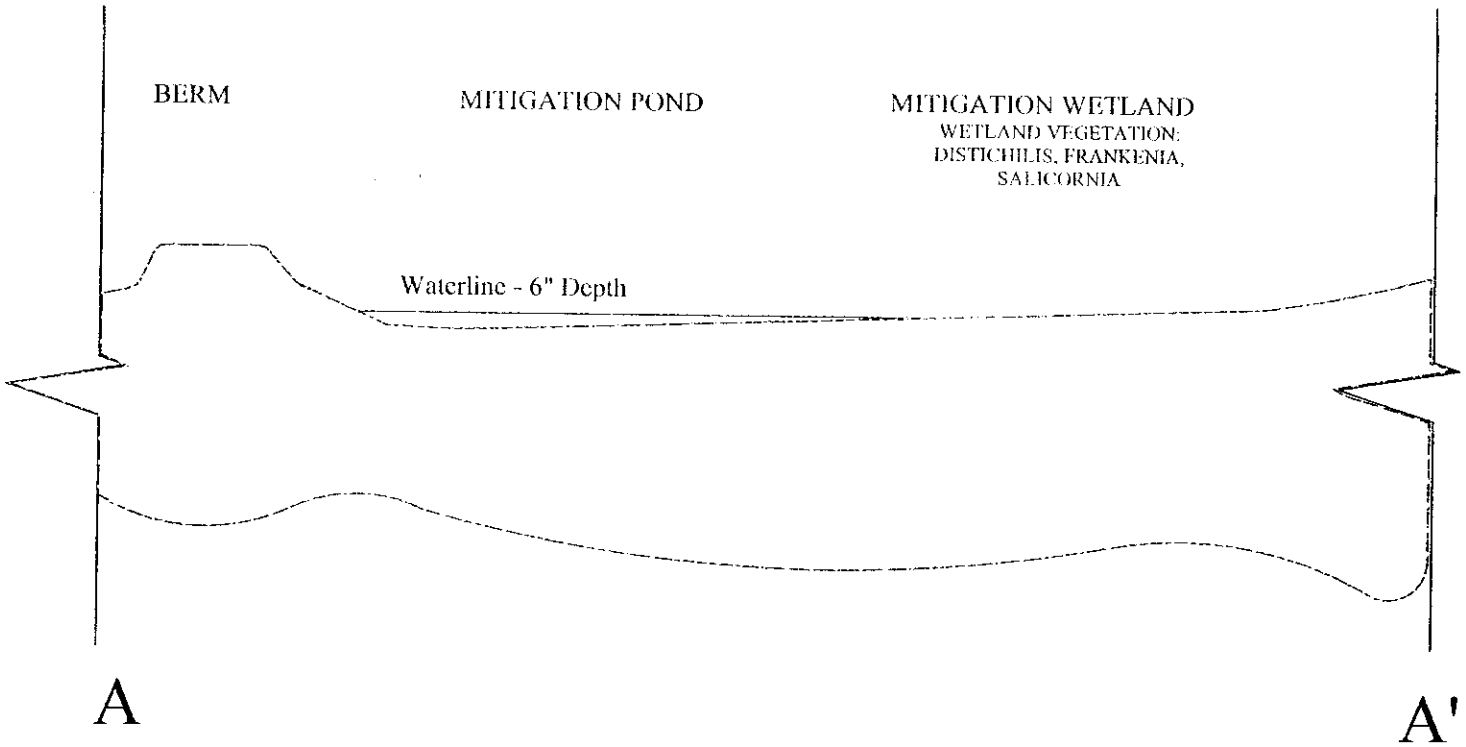

PURPOSE: Salt Removal

SOURCE: Pacific Aerial Surveys
06/28/00

L:\Land Projects\01001\schematic_section.dwg

Figure 9: Mitigation Wetland and Pond - Section

20 0 20 40 FEET

SCALE 1:20

Wetlands Research Associates, Inc.
2169-G East Francisco Blvd.
San Rafael, CA 94901
Contact: Michael Josselyn
Phone: 415-454-8868

Napa Salt Ponds

LOCATION: Lower Napa River

COUNTY: Napa

APPLICATION BY: Dept. of Fish and Game

SHEET: 9 of 9 DATE: 03/14/03